UNITED STATES MARINE CORPS
THE BASIC SCHOOL
MARINE CORPS UNIVERSITY
24164 BELLEAU AVENUE
QUANTICO, VIRGINIA 22134-5019

B2113 Student Handout

INTRODUCTION TO COUNTERMECHANIZED AND MECHANIZED WEAPONS

Section 1. AT-4 Light Anti-Tank Weapon (LAW)

History. The ordnance division of Forenade Fabriksverken (FFV), a Swedish state-owned company, developed the AT-4. Development started in 1976; manned firing started in the spring of 1981, which lead to mass production in 1984. The AT-4 is an organic weapon located in the infantry battalion. The weapon is non-MOS specific and can be fired by any Marine with basic infantry skills.

Description. The AT-4 (see diagram below) is a light, recoil-less, antitank weapon for close-range combat, designed to let part of the propellant gases escape to the rear. Additionally, it is a discardable, self-contained rocket launcher.

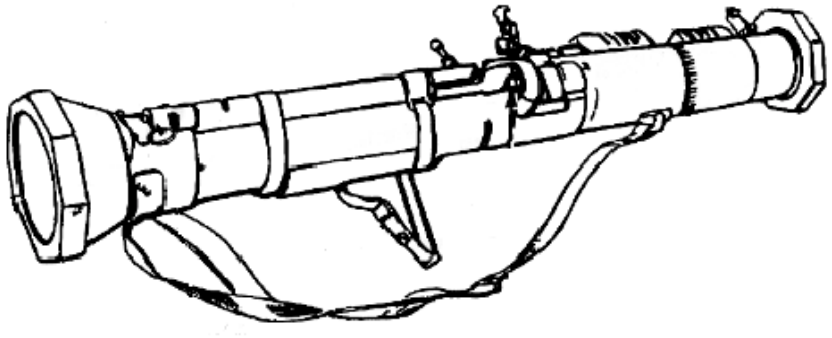

AT-4

Specifications. The table below lists the specifications of the AT-4.

Weight	14.8 pounds
Length	40.0 inches
Range • Maximum	 2100 meters
• Maximum effective	300 meters
• Minimum (training)	30 meters
• Minimum (combat)	10 meters
• Aiming	10 meters
Muzzle velocity	290 mps
Armor penetration	In excess of 17.7 in (homogeneous steel)

Nomenclature. The AT-4 has the following components (see diagram below):

- Transport safety pin that provides safety for transportation and attaches to the AT-4 by a lanyard.
- Cocking lever that cocks the firing mechanism.
- Fire-through muzzle cover that keeps out moisture and prevents foreign objects from entering the muzzle.
- Color code band that indicates the type of cartridge.

- Sights
  - Rear sight that consists of a sight blade, range setting knob, range indicator, 2 mm peephole, and a 7 mm peephole.
  - Front sight that consists of a sight blade, a center post, and right and left lead posts.
- Venturi that performs two functions:
  - Protects the weapon from damage if it is dropped.
  - Directs the flow of the backblast.
- Red safety catch that must be fully depressed and held before pressing the trigger button or the AT-4 will not fire. This feature is also provided as a final safety measure.
- Red trigger button that fires the weapon.
- Shoulder stop that helps stabilize the AT-4 on the shoulder.
- Carrying sling that provides a means to carry the AT-4.

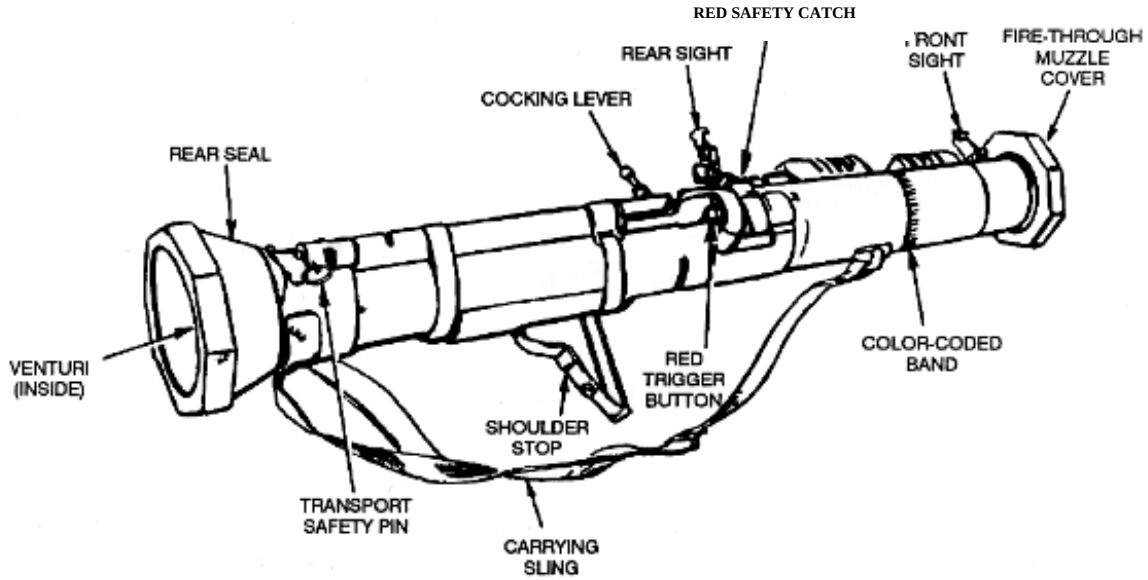

M136 AT-4

Safety Devices. You cannot fire the weapon unless the three safety devices (described in the table below) have been disengaged.

Safety Device	Function
Transport safety pin	• Blocks the movement of the firing pin • Prevents firing pin from striking the cartridge percussion cap • To disengage the transport safety pin, pull the pin out and release it.
Cocking lever	• Attached to the firing rod • When the lever is in the safe position, the firing rod and the trigger have no contact • To cock the AT-4, push the lever forward and down with the thumb of the right hand • When the weapon is cocked, the firing rod is engaged with the trigger through the hooks on the front part of the firing rod and the red trigger button.
Red safety catch	• Located on the front end of the firing mechanism • Is connected to a steel rod that prevents the firing rod from striking the firing pin • Must be fully depressed and held down before the AT-4 can be fired

Color-Coding. M136 AT-4 launchers are marked with color-coded bands (see diagram below):

- A black with yellow band indicates an HE antiarmor round (early models had a solid black band)
- A gold or yellow band indicates a field-handling trainer
- No band indicates an M287 9-mm tracer bullet trainer

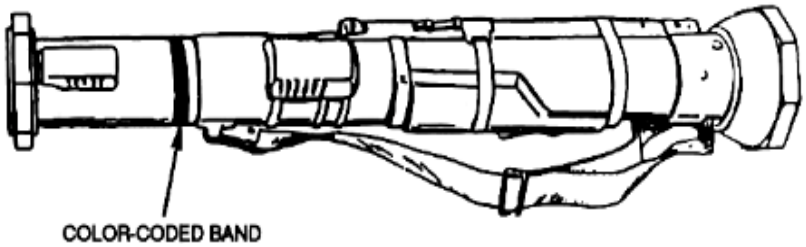

Location of Color-Coded Band

Employment Considerations.

Backblast. The backblast danger area extends at a 90 degree angle arc from the rear of the launcher 5 meters. No large vertical objects may be 5 meters to the rear of the launcher. Another 95 meters behind the danger area is the caution area. Personnel or equipment in this area could be injured or damaged by backblast or flying debris. Therefore, you must keep clear a total area of 100 meters behind the launcher when firing (see diagram below).

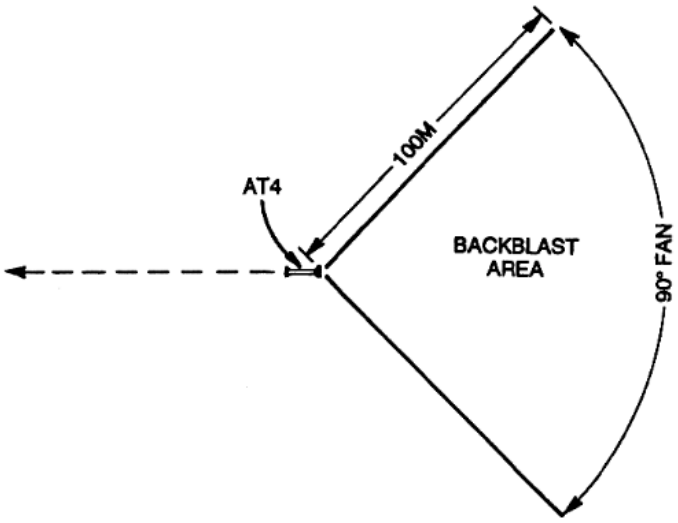

M136 AT-4 Backblast

As long as the structure has a volume of 50 cubmic meters, you may fire the AT-4 inside a building. However,

- All personnel must have ear protection and be forward of the rear of the launcher.
- The structure must have good ventilation with glass removed from windows.
- No objects can be within five meters of the rear of the launcher because the backblast is a dangerous mixture of
  - Noise
  - Dust
  - Pressure
  - Light

A direct line of sight to target is required. Heavy brush, vegetation, or other obstruction may deflect the rocket.

Inspecting/Functions Check. The table below lists the steps for inspecting and conducting a functions check.

Step	Action
1	The transport safety pin should be inserted in weapon.
2	Cocking lever should be in the SAFE position.
3	Be sure that the muzzle cover is intact.
4	Ensure that your have the correct color band for the type of ordnance that you wish to fire.
5	Ensure that the sights are adjustable/serviceable.
6	Ensure that the rear seal, a brown acrylic plastic plate inside the venturi, is in place and undamaged.
7	Inspect the outside of the weapon completely; it must be serviceable (no cracks, dents, bulges, missing components etc).

Functioning. The M136 AT-4 is a round of ammunition with an integral, rocket-type cartridge. The cartridge (see diagram below) consists of a

- Fin assembly with tracer element
- Point-initiating, base-detonating, piezoelectric fuze
- Warhead body with liner
- Precision-shaped explosive charge

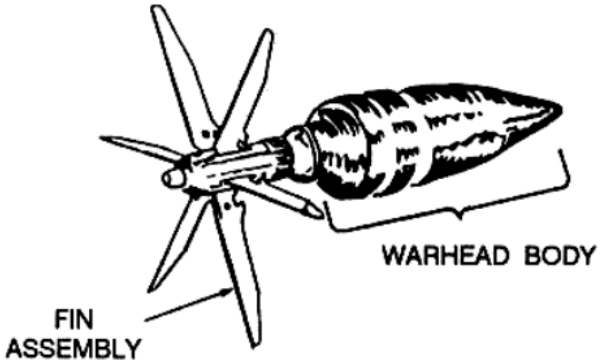

84 MM HEAT Cartridge

Description. The M136 AT-4's warhead has excellent penetration ability and lethal after-armor effects. The extremely destructive, 440-gram shaped-charge explosive penetrates more than 17 inches of armor. Warhead effects are (see diagram below)

- Impact. The nosecone crushes; the impact sensor activates the fuze.

- Ignition. The piezoelectric fuse element activates the electric detonator. The booster detonates, initiating the main charge.

- Penetration. The main charge fires and forces the warhead body liner into a directional gas jet that penetrates armor plate.

- After-armor effects (spalling). The projectile fragments and incendiary effects produce blinding light and destroy the interior of the target.

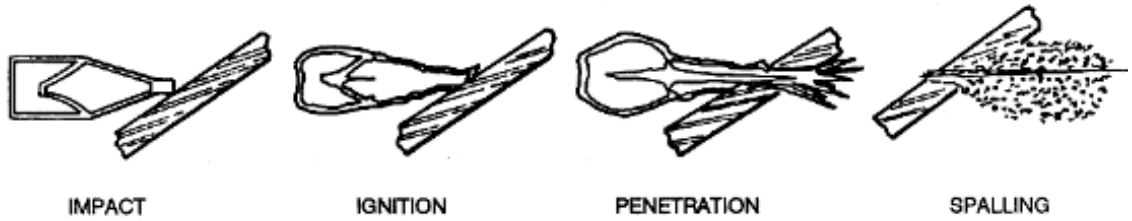

Effects of the AT-4 Warhead

Operation.

Firing. The table below lists the steps for firing the AT-4.

Step	Action
1	Remove the transport safety pin.
2	Unfold the shoulder rest.
3	Shoulder the weapon.
4	Release sights from their covers.
5	Unfold and push cocking lever forward and down to the FIRE position.
6	Adjust the rear sight. (If range is less than 250 meters no adjustments arc necessary.)
7	Visually inspect the backblast area to ensure that it is clear, and then yell, “Backblast area all secure.”
8	Aim in on the designated target.
9	Depress the safety.
10	Press trigger.

Immediate Action Procedures. If the AT-4 fails to fire, perform the immediate action steps listed in the table below.

Step	Action
1	Shout, “Misfire!”
2	Maintain original sight picture.
3	Release the red safety catch.
4	Recock the cocking lever.
5	Check the back blast.
6	Press and hold the red safety catch.
7	Attempt to fire.
8	If the AT-4 fails to fire again, repeat steps 1 - 7.
9	If the AT-4 still does not fire, release the red safety catch and return the cocking lever to the safe position.
10	Remove the launcher from the shoulder.
11	Keep the muzzle pointed at the target.
12	Reinsert the transport safety pin.
13	Wait two minutes; place the launcher on the ground, muzzle pointed toward the target. NOTE: The unit ammo tech must pack an AT-4 that has failed to fire in its original packing material and return it to the ammunition supply point for turn-in as Grade 3 ammunition in accordance with unit SOP.

Sights. Because the AT-4's front and rear sights resemble those of the M16-series rifle, using the AT-4 is easier (see diagram below).

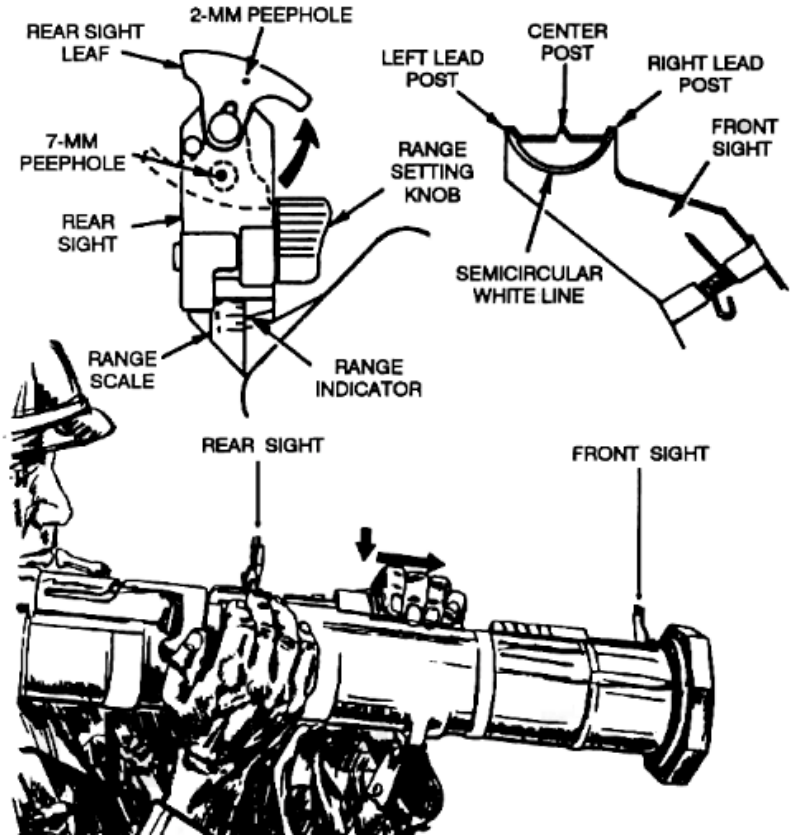

Sight Location and Resemblance to M16 Series Rifle Sights

Front Sight. The front sight has a sight blade with a center post and left and right lead posts. A semicircular white line helps you obtain the proper sight picture. To open the front sight cover,

- Press down on it
- Slide it backward until the sight pops up

Rear Sight. The rear sight has

- A sight blade
- Range adjustment knob
- Range scale
- Two peepholes
  - 2-mm for normal daylight visibility conditions
  - 7-mm for limited visibility conditions

To open the rear sight cover,

- Press down on it
- Slide it forward until the sight pops up

The leaf blade that covers the 7-mm peephole has its own tiny 2-mm peephole. To uncover the 7-mm peephole, pull the bottom of the leaf blade out slightly and rotate it right and up. To cover the 7-mm peephole, rotate it back down and ensure the leaf blade is seated. The range indicator scale is indexed from 100 to 500 meters in 50-meter increments.

To increase the range setting beyond 200 meters, turn the range adjustment knob clockwise, or vice versa (see diagram below).

NOTE: Remember to reset the range to 200 meters when you close the rear sight. Otherwise, closing the sight cover will break off the rear sight.

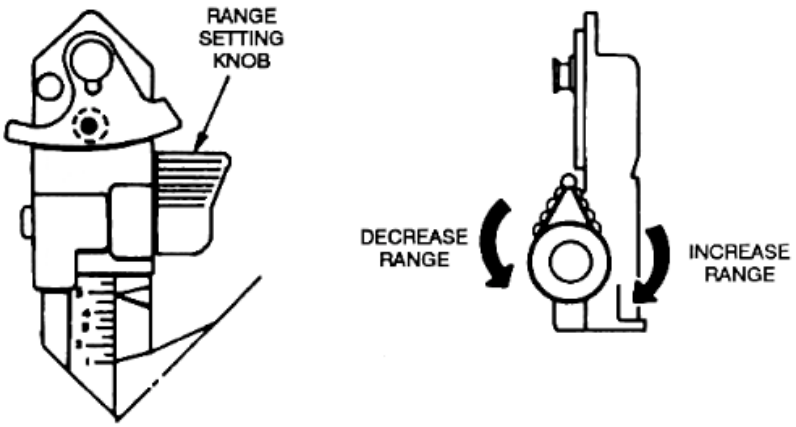

Adjusting the Rear Sight Range Setting

Aiming. Aiming procedures include

- Placing the eye correctly
- Obtaining a sight picture
- Aligning the sight

Combining these procedures is critical to correctly aiming light anti-armor weapons.

Eye Placement. Before sighting the weapon, estimate the range. Place your firing eye 2 1/2 to 3 inches from the rear sight.

CAUTION: Do not place your eye any nearer than 2 1/2 inches from the rear sight to prevent possible injury from the weapon's recoil and to correctly align the sight on the AT-4.

Sight Alignment. Position the rear sight so that the white semicircle of the front sight is a hazy line around the bottom half of the rear sight opening. Position the front sight posts on the target (see diagram below). Align the sight by moving your head forward or backward.

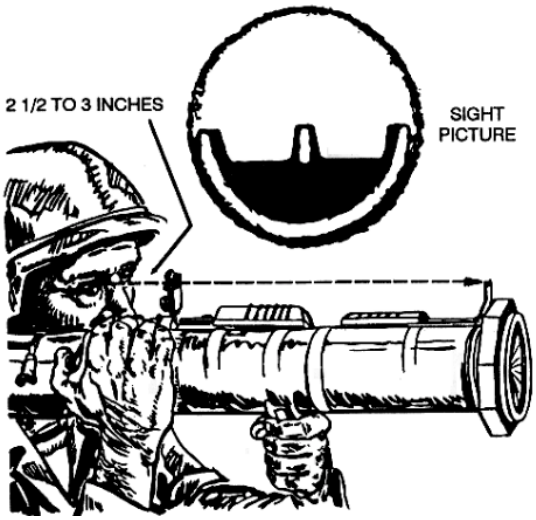

Sight Alignment

Sight Picture. Position the front sight on the target as described in the table below.

Type of Target	Action
Stationary, including those moving directly toward or away from the firer	• Adjust the rear sight for the correct range • Place the center sight post in the center of the target (see diagram below) Sight Picture: Stationary Targets
Slow-moving vehicles • Estimated speed of 10 mph or less) • Moving in an oblique direction	Place the center sight post on the front or leading edge of the vehicle (see diagram below) 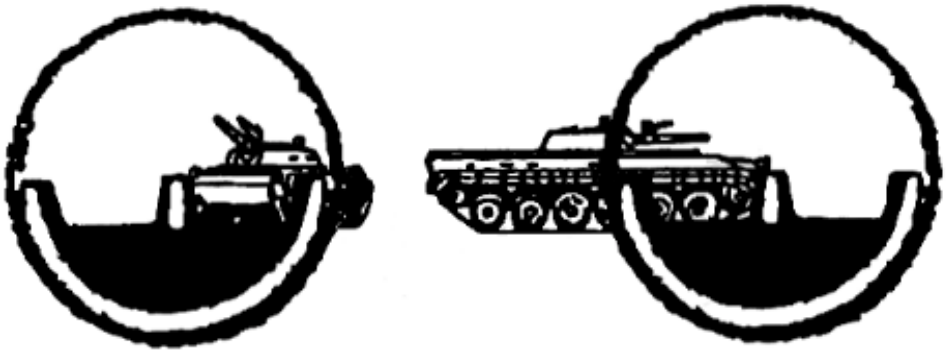 Sight Picture: Slow-Moving Targets
Fast-moving vehicles, moving faster than 10 mph	Place either the left or right lead post on the center of the target. For example, if the target is moving from left to right, place the left lead post on the target's center of mass, and vice versa (see diagram below) Sight Picture: Fast-Moving Targets

Methods of Target Engagement. The four engagement methods are

- Single
- Sequence
- Pair
- Volley firing

The leader evaluates the situation on the ground to determine which method to use. Regardless of whether they are used singly or in combination, communications are vital. The methods of engagement are rehearsed IAW unit SOP.

Single Firing. Although single firing is not the preferred method of engagement, a single Marine with one light anti-armor weapon may engage an armored vehicle. Several light anti-armor weapons are required to kill an armored vehicle. A single firer firing one round must hit a vital part of the target to damage it at all (see picture below).

Single Firing

When a single firer

- Does not know the actual range, the firer should engage only targets within 200 meters. The probability that he will hit a target beyond 200 meters with a single round is small.

- Knows the actual range, a single firer can engage targets out to

  - 225 meters with the LAW
  - 300 meters with the AT-4

  but should do this only when it is a flank or rear shot or when there is no other engagement option.

Sequence Firing. In sequence firing, a single firer, equipped with two or more light anti-armor weapons prepared for firing, engages the target. After engaging with the first round and observing the impact, the firer adjusts the point of aim, engages with another round, and so on until the target is destroyed or the firer runs out of rounds (see picture below).

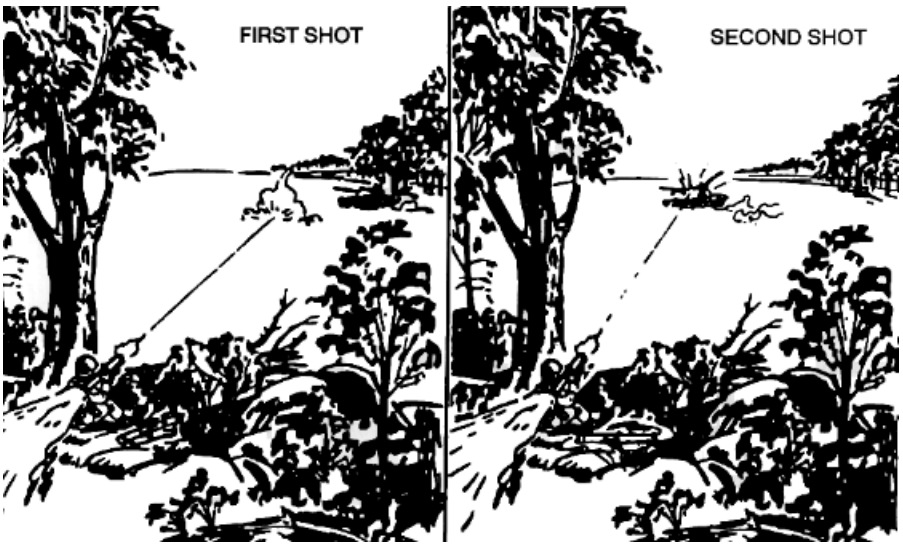

Sequence Firing

Pair Firing. In pair firing, two or more firers, equipped with two or more light anti-armor weapons prepared for firing, engage a single target. Before firing, the first firer informs the others of the estimated speed and distance to the target. If the impact of that round proves the estimate to be

- Correct, the other firers engage the target until it is destroyed
- Incorrect, the second firer informs the others of a new estimate and then engages the target

This process continues until the target is destroyed or all rounds are expended (see picture below).

Pair Firing

Volley Firing. The best method of engagement with a light anti-armor weapons is volley firing; when the range to a single target is known, two or more firers engage it at one time on a prearranged signal such as a command, whistle, booby trap, mine, or TRP. Volley firing is the best method of engagement with a light anti-armor weapon because it places the most possible rounds on one target at one time, increasing the possibility of a kill (see picture below).

Volley Firing

Communications. Leaders control all unit fire and communicate this information to the entire unit according to the unit SOP. Light anti-armor weapons firers must know the

- Designated firers
- Target priority
- Method of engagement
- Range and lead to target (if known)
- Command or signal to
  - Fire
  - Cease fire

Firing Positions. The diagrams below show the four firing positions:

- Kneeling
- Standing
- Sitting
- Prone

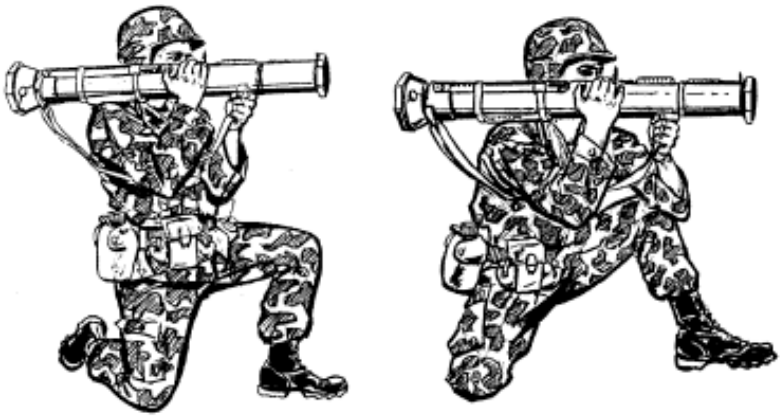

Kneeling

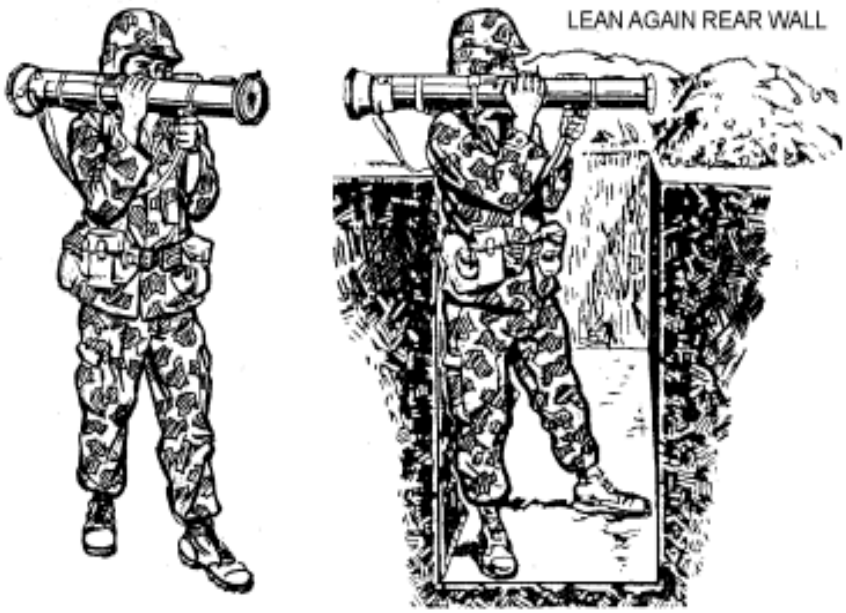

Standing

Sitting

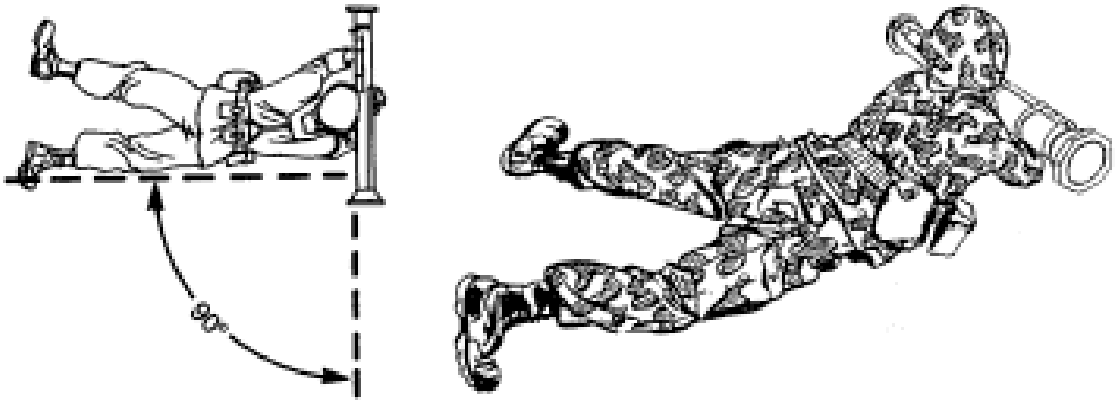

Prone

<u>References</u>.

FM 23-25, *Light Anti-armor Weapons*
TM 9-1315-886-12, *Technical Manual for the AT-4*

Section 1 Review Questions

Short Answer. Write your answer in the space provided.

1. What are the three main characteristics of the AT-4?

_____

_____

_____

2. What is the arming range of the AT-4?

_____

3. What is the maximum effective range of the AT-4?

_____

Matching. For items 4 through 11, fill in the name of each component identified in the illustration below in the space provided.

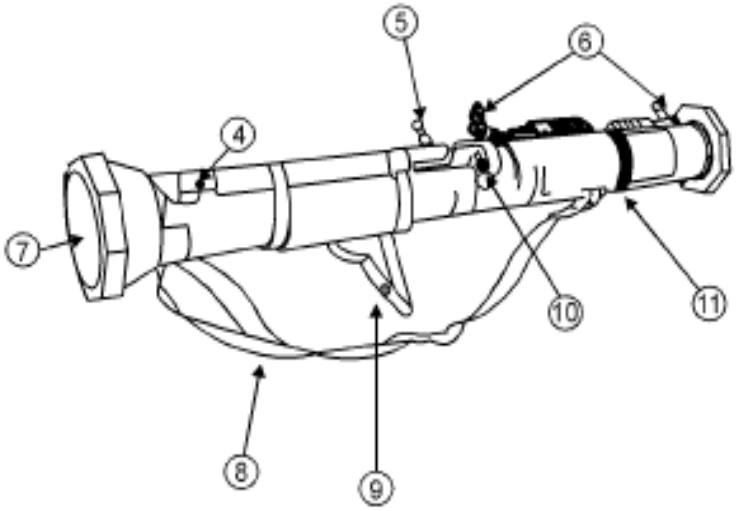

4. _____

5. _____

6. _____

7. _____

8. _____

9. _____

10. _____

11. _____

Short Answer. Write your answer in the space provided.

12. What is the color code for high explosive antitank AT-4?

_____

13. What are the three safety devices that must be disengaged before firing the AT-4?

_____

_____

_____

14. What is the first step for handling a misfire with an AT-4 in training?

_____

15. What is the caliber of the tactical (HEAT) cartridge?

_____

Matching: For items 16 through 20, match the targets in column 1 with the speed in column 2 by writing the letter in the corresponding space.

Column 1 **Targets**	**Column 2** **Speed**
16. _____ 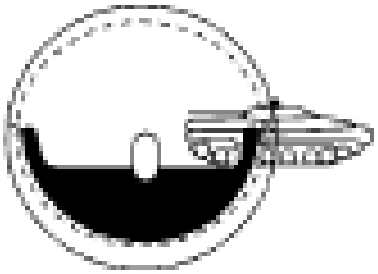	a. Fast b. Slow c. Stationary
17. _____ 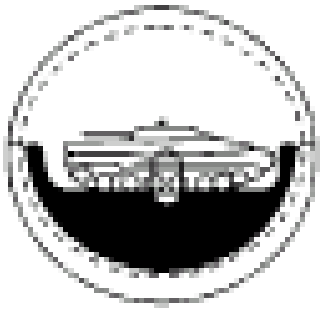	

Column 1 **Targets**	**Column 2** **Speed**
18. _____ 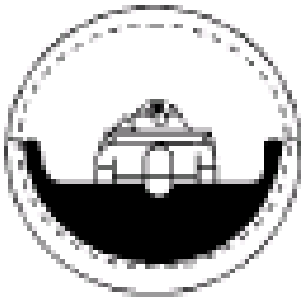	
19. _____ 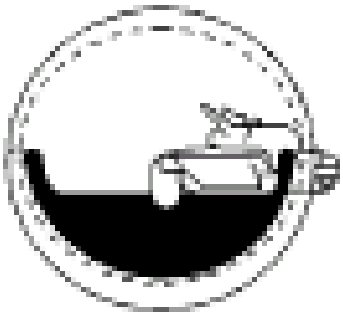	
20. _____ 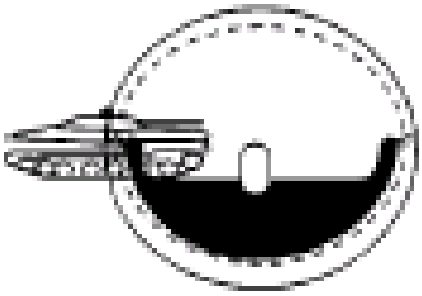	

Fill in the Blank. Write your answer in the space provided.

21. The area immediately to the rear of an AT-4 must not have walls, large trees, or any other obstruction within _____ meters that will deflect the backblast onto the shooter. The total backblast danger area is _____ meters deep with at a _____ -degree fan from the rear of the launcher.

Section 1 Review Question Answers

Short Answer. Write your answer in the space provided.

1. What are the three main characteristics of the AT-4?

Lightweight, recoilless, antitank weapon

2. What is the arming range of the AT-4?

10 meters

3. What is the maximum effective range of the AT-4 is _____ meters.

300 meters

Matching. For items 4 through 11, fill in the name of each component identified in the illustration below in the space provided.

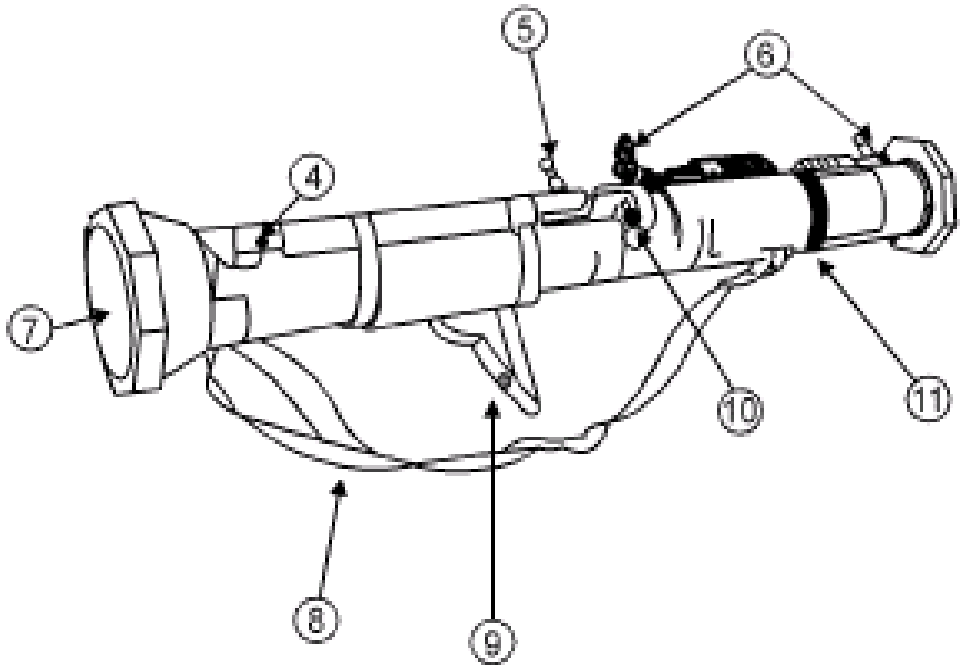

4. Transport safety pin

5. Cocking lever

6. Sights

7. Venturi

8. Carrying sling

9. Shoulder strap

10. Red trigger button

11. Color-coded band

Short Answer. Write your answer in the space provided.

12. What is the color code for high explosive antitank AT-4?

Black with yellow band

13. What are the three safety devices that must be disengaged before firing the AT-4?

Red safety catch, transport safety pin, cocking lever

14. What is the first step for handling a misfire with an AT-4 in training?

Shout, "Misfire!"

15. What is the caliber of the tactical (HEAT) cartridge?

84 mm

Matching: For items 16 through 20, match the targets in column 1 with the speed in column 2 by writing the letter in the corresponding space.

Column 1 **Targets**	**Column 2** **Speed**
16. a. Fast 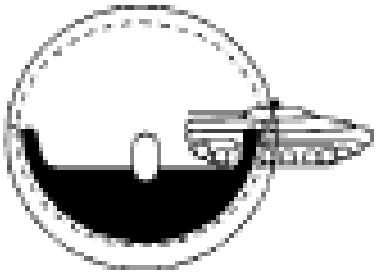	a. Fast b. Slow c. Stationary
17. c. Stationary 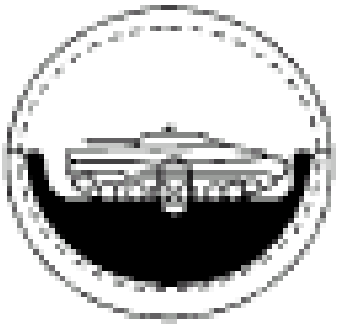	

Column 1 **Targets**	**Column 2** **Speed**
18. c. Stationary 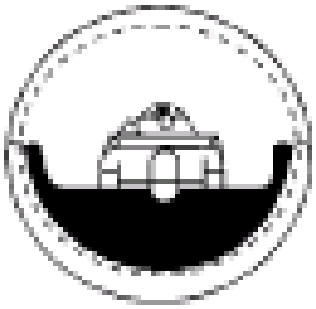	
19. b. Slow 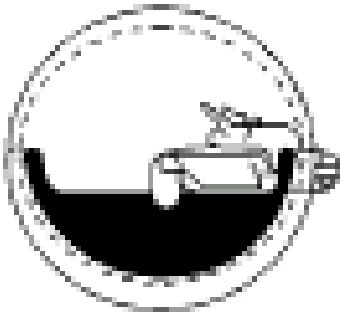	
20. a. Fast 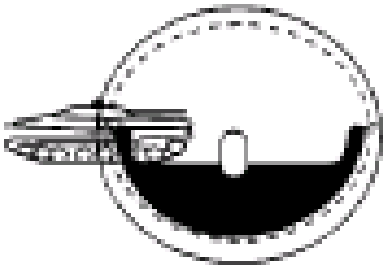	

Fill in the Blank. Write your answer in the space provided.

21. The area immediately to the rear of an AT-4 must not have walls, large trees, or any other obstruction within 5 meters that will deflect the backblast onto the shooter. The total backblast danger area is 100 meters deep with at a 90 -degree fan from the rear of the launcher.

Section II. MK 153 Shoulder-Launched Multipurpose Assault Weapon (SMAW)

History. The U.S. Marine Corps and The Naval Surface Weapons Center approached McDonnell Douglas Astronautics Company (MDAC-TVL) in 1974 to seek ideas concerning a shoulder-launched assault weapon capable of neutralizing protected battlefield bunkers and field fortifications. In 1978, MDAC-TVL produced a three-tube reusable launcher and a single-tube throwaway launcher. At that time the launcher was equipped with a spotting rifle to improve first-round hit capability. In 1982, after a successful demonstration, MDAC-TVL was awarded a contract to begin developing the SMAW toward a producible design.

Description. The MK153 SMAW (see picture below) is a one-man operable, 83 mm smooth bore, shoulder-fired, rocket launcher with a spotting rifle attached to the right side of the launcher tube. The encased rocket is fitted into the aft end of the launcher, and the fiberglass encasement is discarded after use.

The spotting rifle, which improves first-round hit probability, is fed 9 mm tracers by a magazine, which holds six rounds. The 9 mm round is ballistically matched to the 83mm rocket.

The weapon is aimed by using the

- Iron sights
- Telescopic sight
- AN/PVS-4 night vision sight, which is attached to the sight mount

The AN/PEQ-2A can also effectively be used on this weapon system in conjunction with night vision goggles.

The SMAW fires a

- Practice rocket, HEDP (High Explosive Dual Purpose) rocket, which is employed against bunkers and field fortifications
- HEAA (High Explosive Anti Armor) rocket, which is employed against armor vehicles

Specifications. The table below lists the specifications for the SMAW.

Rocket launcher • Length	29.9 inches
• Weight	16.9 pounds
Encased rocket (as carried) • Length	27.3 inches
• Weight	12.7 pounds
• Caliber	83 mm
Spotting rifle • Length	27.3 inches
• Weight	3.74 pounds
• Caliber	9 mm
Telescopic sight (MK 42 MOD 0) • Length	7.9 inches
• Weight	1.99 pounds
• Magnification	3.8 times
• Field of view	6 degrees
Weapon read to fire • Length	53.1 inches
• Weight	29.0 pounds
• Range	
• Minimum	10 m
• Maximum	1800 m
• Maximum effective (HEDP)	250 m
• Maximum effective (HEAA)	500 m
Time of flight to 250 m	1.6 sec
Penetration capabilities • Bunker, sandbag, with wood reinforcements	7 feet
• Brick	12 inches
• Concrete	8 inches
• Steel armor	1 inch
• Anti-armor round	23 inch/steel

An assault section is composed of thirteen Marines:

- A section leader
- Three squads, each consisting of two teams

An assault team is composed of a two Marines who are both assigned the MOS of 0351, antitank assault man:

- A team leader
- A gunner

Each assault team carries a MK153 SMAW. The assault section is part of a weapons platoon and is found in a rifle company (see chart below).

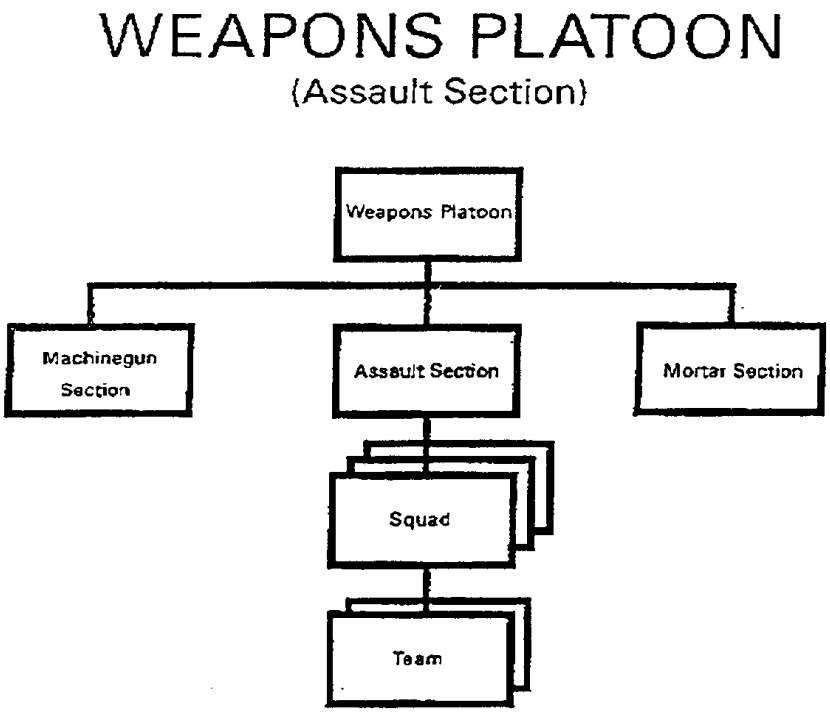

Wire Diagram of a Weapons Platoon with Emphasis on the Assault Section

Nomenclature. The twelve major components of the MK153 SMAW are depicted in the diagrams and described in the table below.

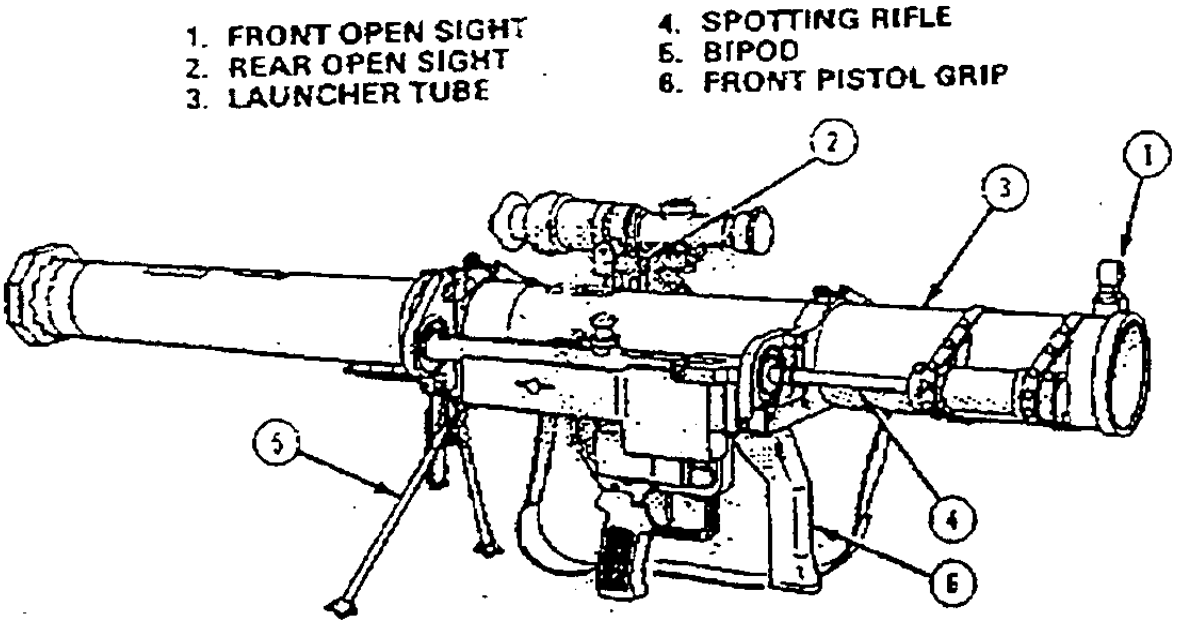

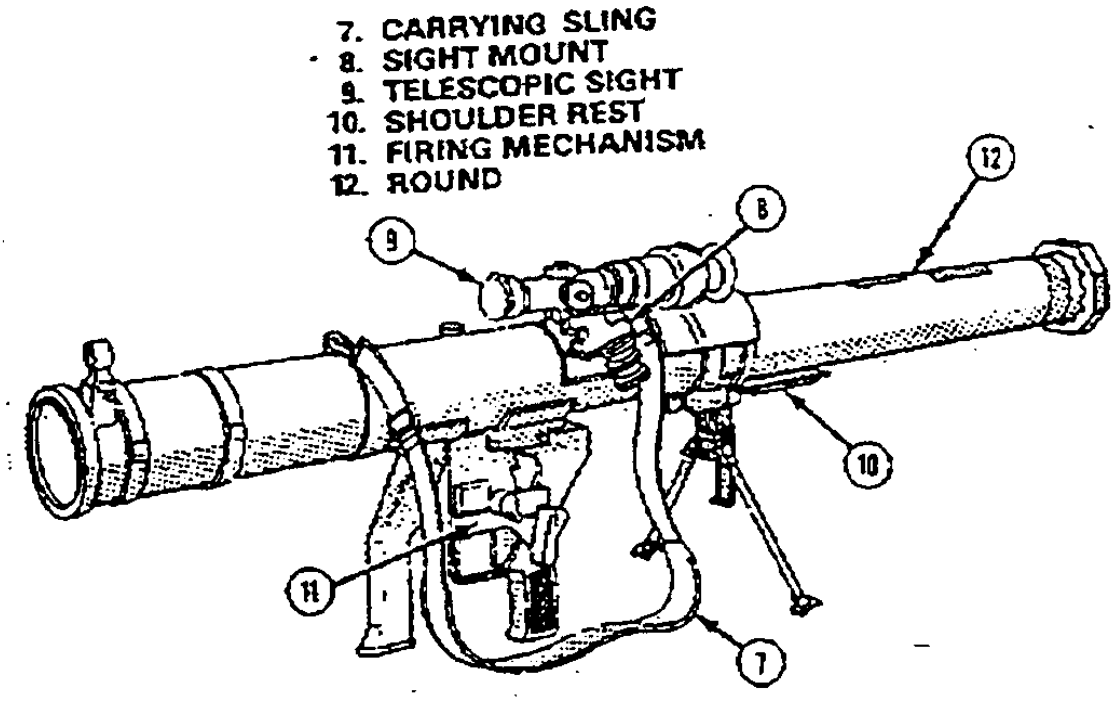

Major Components of MK153 SMAW

Diagram Callout Number	Item	Description
1	Front open sight	• Consists of a metal sight post protected by a circular guard • Ordnance personnel can adjust elevation and windage
2	Rear open sight	• Consists of a metal "U-shaped" notch through which the front sight post is aligned with the target • Fixed for 250 meters
3	Launcher tube	• 83 mm smooth-bore reinforced fiberglass tube • Encased rocket and all major components are attached to tube
4	Spotting rifle	• Blowback-operated • Magazine-fed • Semiautomatic rifle which fires a 9 mm tracer round (with a 22 hornet primer) crimped into a 7.62 standard NATO casing • Tracer round is visible out to a range of 500 meters
5	Bipod	Consists of two folding legs mounted near the shoulder rest on the underside of the launcher tube. The legs • Rotate downward and rearward from the stowed position • Spread 60 degrees apart to support the center of gravity of the weapon when firing from the prone position
6	Front pistol grip	• A hollow, black, plastic handle fastened to the underside of the launcher tube forward of the firing mechanism • Used for supporting the weapon with the left hand to provide stability when aiming and firing
7	Carrying sling	Webbed strap for carrying the launcher

Diagram Callout Number	Item	Description

8	Sight mount	• Designed to accommodate either the telescopic sight or the AN/PVS-4 night vision sight
		• Located on the left side of the launcher
		• Provides range adjustment of the sights during use
		• The four subcomponents of the sight mount are the(see diagram below)
		  • Range window which provides for range selection and temperature compensation. Window has two marks: white for normal/hot temperature operation and blue for cold temperature (-32 degrees or below) operations (1 in diagram below)
		  • Outer drum which rotates to bring the HE window into position facing the rear of the sight mount (2 in diagram below)
		  • Inner drum which rotates to provide range adjustments up to 500 meters (3 in diagram below)
		  • Captive thumb screw used to secure the sight to the sight mount in either of two positions: Rearward is usually used during normal firing; the forward position is used when wearing the field protective mask (4 in diagram below)
		 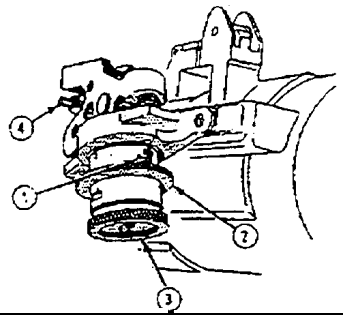

9	Telescopic sight	• 3.8 power, six-degree field of view with a cross hair reticle for adjusting the aim point • Lens is provided with a cover for protection when not in use
10	Shoulder rest	• Consists of a folding metal bracket with rubber cushions • Designed to rest on the gunner's shoulder to support the center of gravity of the loaded weapon while aiming and firing • When not in use, folded into a channel on the underside of the launcher

Diagram Callout Number	Item	Description

11	Firing mechanism	• Provides control for firing the spotting rifle and launching the rocket
		• A safety to prevent accidental firing
		• Attached to the underside of the launcher tube
		• Operated with the gunner's right hand
		• Consists of the trigger and three control levers (see diagram below)
		  • Safety lever. When in the FIRE position, it permits free manipulation of the trigger; in the SAFE position, mechanically blocks the trigger action.
		  • Charging lever. Cocked during the firing sequence and remains in the CHARGE position until the rocket is launched.
		  • Launch lever. Operated with the thumb of the gunner's right hand. When the launch lever is depressed and held forward and the trigger is pulled, the rocket is launched.
		 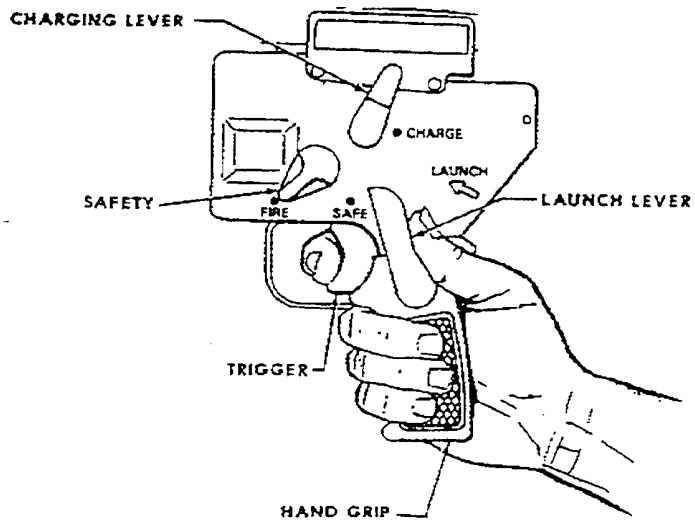

Diagram Callout Number	Item	Description

12	Round	The three types of rounds for the MK153 SMAW are
		• Tactical. The two tactical rounds are
		  • HE dual mode (see diagram below). The rocket impact fuze causes immediate detonation upon contact with a hard target and also provides for a penetration time delay upon contact with a soft target. For example, with sand bags it detonates at 7 feet.
		 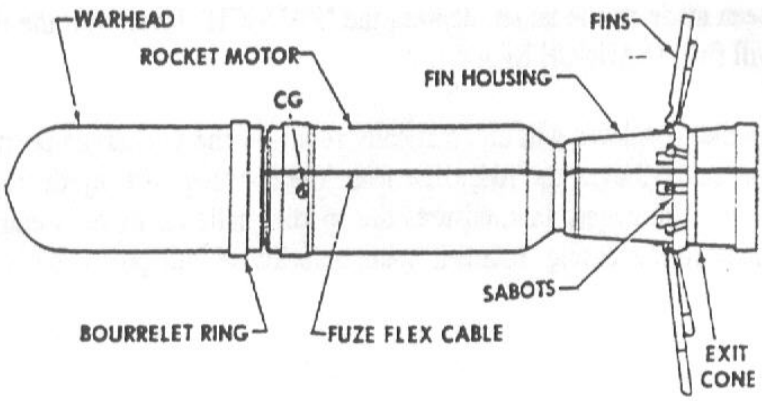
		
		  • HE anti-armor (HEAA) (see picture below)
		
		• Practice. Identical to the tactical round, but with an inert warhead.
		• Trainer. A simulator, which weighs the same as a tactical round and provides overpressure and sound level training for the SMAW gunner, uses a noise cartridge to provide the simulation.
		<u>NOTE</u>: All three types of rounds come with six 9-mm tracer rounds found in the front cover inside the rocket cap of the fiberglass tube.

Operating Procedures.

Preparation for Firing. The table below lists the steps to prepare the MK153 SMAW launcher for firing:

Step	Action
1	Check the firing mechanism safety lever; be sure it is in the SAFE position and the CHARGE lever is in the uncharged position. Check the launcher tube to be sure it is free of obstructions.
2	Inspect the launch tube, inside and out, for dents and cracks. Also inspect the inside for bubbles for servicability.
3	Inspect the round for obvious dents, cracks, or separations. Remove the front-end cap of the encased rocket by rotating it 1/4 turn counterclockwise. Place the cap on the deck with the magazine facing up. Do not touch the electrical contacts.
4	Insert the encased rocket into the aft end of the rocket launcher and rotate it clockwise until it locks in place; be sure the rocket is flush to the MK153 SMAW.
5	Prepare the spotting rifle for firing by completing the steps in the table below.

Step	Action
1	Remove the spotting rifle magazine from the front-end cap.
2	Insert the magazine. Be sure the magazine is locked in place.
3	Keep the weapon pointed down range, then cock the spotting rifle by pulling the cocking lever to the rear and releasing it. The cocking lever is located on the top of the receiver of the rifle.

6	The MK153 SMAW is now prepared for firing.

Firing. Take the following steps to fire the ARL/SMAW.

Step	Action
1	Assume a firing position.
2	Place the charging lever in the CHARGE position.
3	Sight in on the target.
4	Place the safety lever in the FIRE position. When the trigger is pulled, the spotting rifle will fire. (SPOT MODE)
5	Check the back-blast area to ensure it is clear.
6	Once sight adjustments have been made on the target, depress the LAUNCH lever with the thumb of the right hand, pull the trigger. The encased rocket will fire. (LAUNCH MODE)
7	During the firing sequence, the charging lever will automatically return to the uncharged position. Place the safety lever in the "SAFE" position and remove the magazine from the spotting rifle by depressing the locking mechanism on the left side of the magazine well. Then ensure the spotting rifle chamber is empty by pulling the cocking lever to the rear. To remove the empty rocket casing, rotate it counterclockwise and pull it out the aft end of the launcher.

Telescopic Sight. The table below lists the steps to operate the telescopic sight.

Step	Action
1	Estimate the range to the target in meters.
2	Set the sight mount to HE by pulling down on and rotating the outer drum until the HE window appears at rear of the sight mount. Note the temperature and rotate the inner drum to position the estimated range under the proper temperature index (see diagram below). 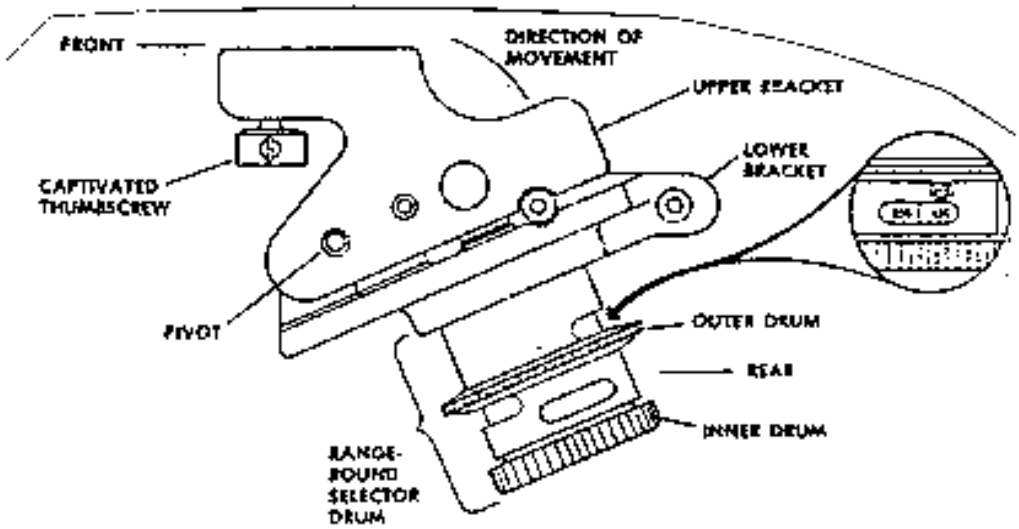 Sight Mount NOTE: The practice round uses the same setting as the HE (tactical) rounds.
3	Place the sight cross hairs on the target's center of mass (see diagram below). 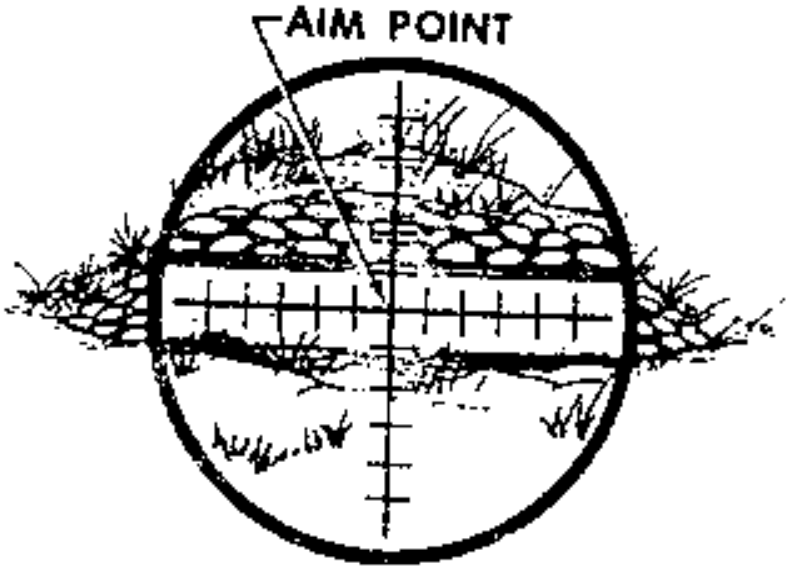 Telescopic Sight Reticle

Step	Action
4	Observe the tracer point of impact on the target in relation to the sight reticle (see diagram below). 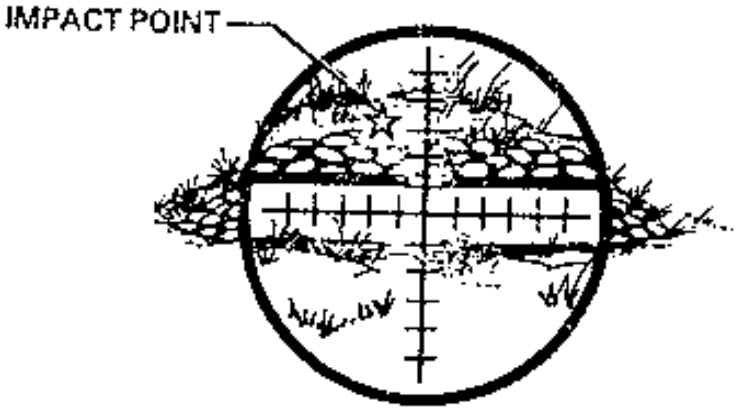 Tracer Point of Impact Fire and observe the first spotting tracer round. If no impact or a large error is observed, re-estimate the range to the target in 50-meter increments. Adjust the range selector knob and fire again. Repeat this process until a tracer strikes on or near the target.
5	Move the adjusted aim point to the target center of mass by moving the weapon (see diagram below). Repeat steps until the desired target impact point is observed. Once the desired impact point is achieved, hold the weapon on that aim point, depress the LAUNCH lever, and squeeze the trigger to fire the rocket. 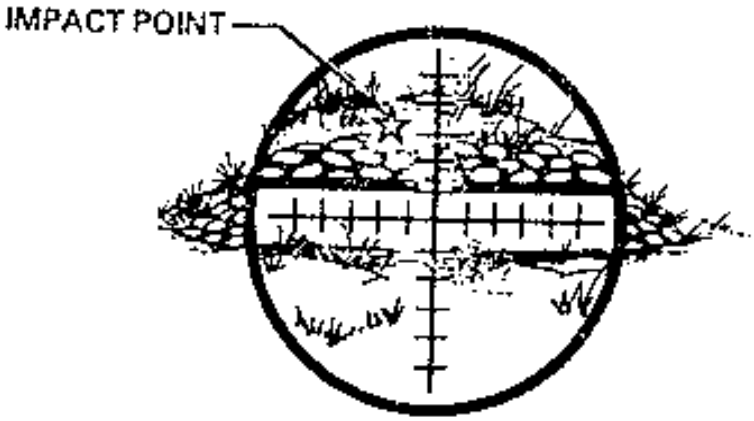 Adjusted Aim Point

Open Sights. The open sights (see diagrams below) are intended as a backup for the telescopic sight. When using the sights, align the top of the front sight post with the top of the notched rear sight. Remember that the open sights are bore-sighted to a 250 meter target.

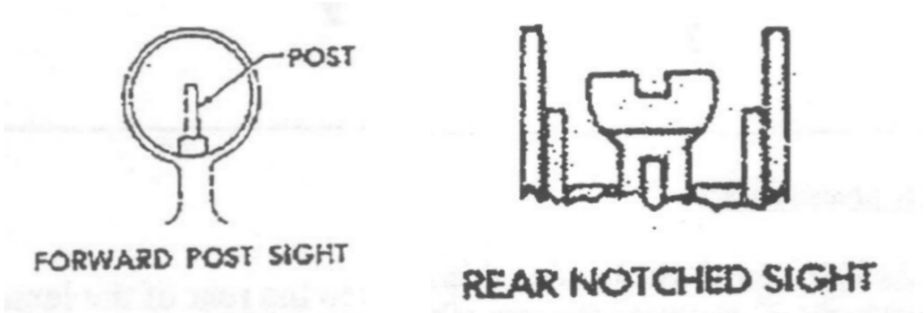

Follow the steps in the table below to use the open sights.

Step	Action
1	Align the open sights onto the center of mass of the target producing the target sight picture (see diagram below).
2	Observe the tracer point of impact on the target in relation to the sights (see diagram below).
3	Adjust the aim by moving the weapon (see diagram below) and confirm by firing another tracer round.
4	Repeat steps 1 through 3 until desired target impact point is achieved.
5	Then hold the correct adjusted aim point on the target, depresses the "LAUNCH" lever, and squeeze the trigger to fire the rocket.

<u>Firing Positions</u>. The four firing positions (see diagrams below) for the MK153 SMAW are

- Standing
- Sitting
- Kneeling
- Prone

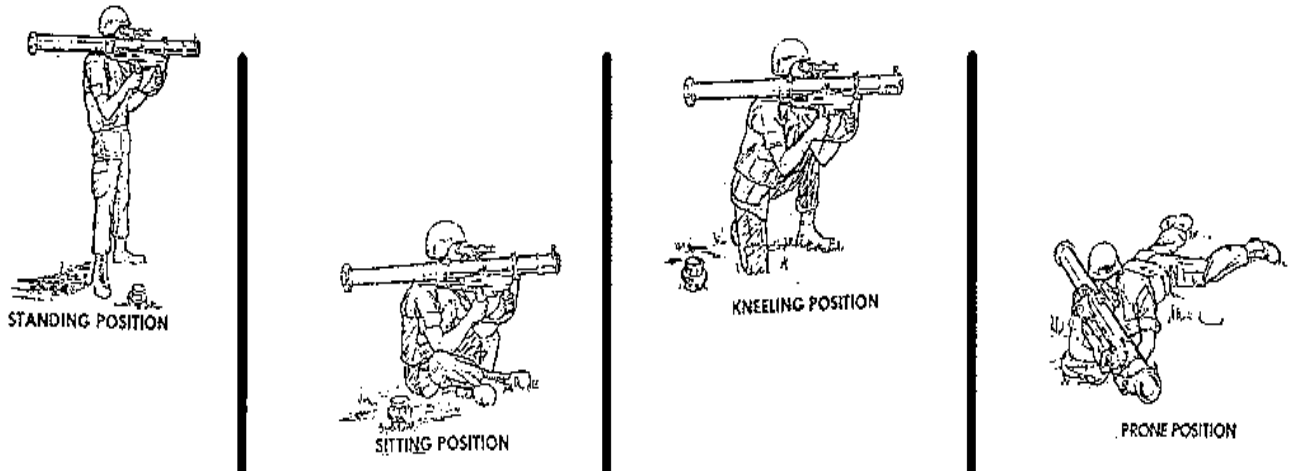

Firing Positions

When firing from the

- Standing, sitting, or kneeling position, use the shoulder rest to balance the weapon on your shoulder
- Prone position, balance the weapon on the bipod legs with your body lying at a 45-degree angle to the weapon.

Safety Precautions. The back-blast danger area (see diagram below) extends at a 60 degree angle, 30 meters to the rear of the launcher. The caution area extends 60 meters to the rear of the danger area. All personnel should remain clear of these areas. Injury may be sustained from blast, flying debris, and excessive sound pressure levels.

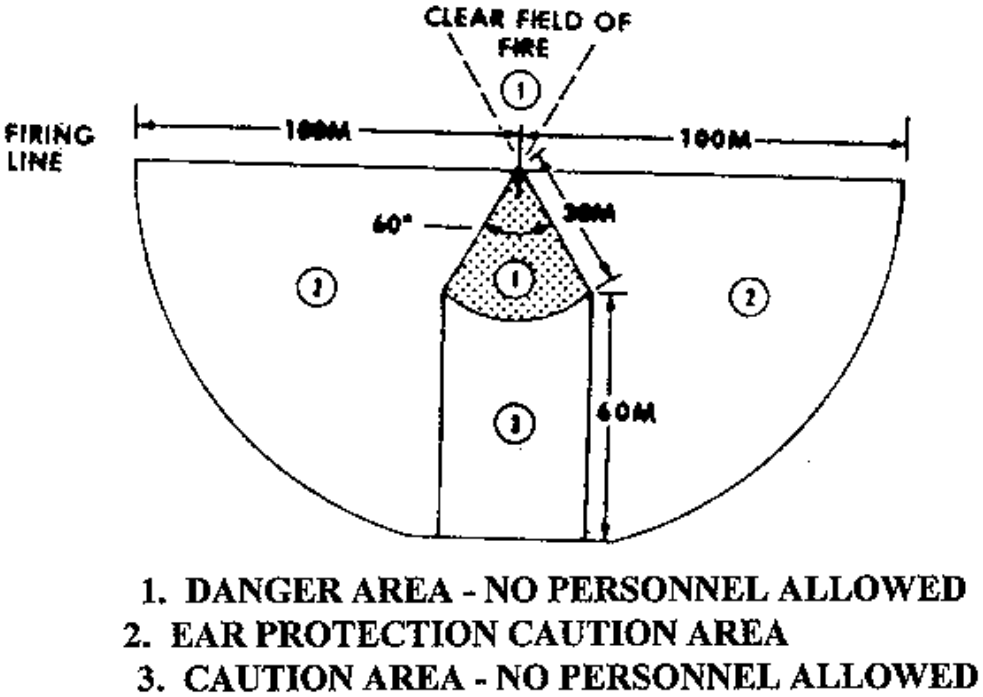

Back-Blast Area

Immediate Action Procedures.

Spotting Rifle. The table below lists the immediate action procedures for the spotting rifle.

Step	Action
1	Place the weapon on "SAFE."
2	Check to ensure the cartridge is seated in the chamber. A chambered cartridge can be viewed inside the receiver of the rifle by pulling the cocking lever rearward about one inch. Attempt to fire again.
3	If it fails to fire again, eject the cartridge by pulling the cocking lever to the rear and chamber another round. Ensure the bolt is fully forward.
4	Attempt to fire.
5	If the second cartridge fails to fire, notify ordnance personnel.

Rocket Launcher. The table below lists the immediate action procedures for the rocket launcher.

Step	Action
1	Shout, “Misfire!”`
2	Wait 30 seconds, keeping the weapon pointed down range.
3	Release the trigger and "LAUNCH" lever and place the safety on "SAFE."
4	Reset the charge lever to "CHARGE."
5	Attempt to fire.
6	Wait 30 seconds, keeping the weapon pointed down range.

Step	Action
7	Release the trigger and "LAUNCH" lever and place the weapon on "SAFE."
8	Remove the round by rotating it counterclockwise and pulling it rearward out of the launcher. Rotate the round one-half turn (180 degrees) and remount to the launcher.
9	Attempt to fire.
10	Wait 30 seconds, keeping the weapon pointed down range.
11	Release the trigger and "LAUNCH" lever and place the weapon on "SAFE."
12	Obtain another launcher (SMAW); attempt to fire again. NOTE: If the round fires with the second launcher (SMAW), the first launcher may be faulty and should be repaired by ordnance personnel.
13	Wait 30 seconds, keeping the weapon pointed down range.
14	Release the trigger and "LAUCH" lever and place the weapon on "SAFE."
15	After three attempts if the rocket still does not fire, remove the round from the launcher and clear the range 100 meters to the left or right and 100 meters back. Notify the RSO (Range Safety Officer) and EOD (Explosive Ordinance Disposal) for proper round disposal.

Additional Safety Considerations

After removing the front-end cover from the encased rocket, do not touch the electrical contacts or you might cause an electrostatic charge to be discharged into the rocket and set it off.

If at any time while firing the spotting rifle you do not see a tracer trail,

- Stop firing immediately
- Clear the rifle by pulling the charging handle to the rear and removing the magazine
- Inspect the bore to ensure it is clear.

Do not look directly into the sun, flares, or search lights through the telescopic sight or you might severely damage your eyes.

When firing from the prone position, be careful to position your body away from the back-blast area.

Before firing, ensure the bore of the launcher is free of obstructions.

The table below shows minimum safe engagement ranges in meters.

Target	Combat	Training
Brick/cement/sandbag	50 m	100 m
Steel/metal	80 m	150 m

NOTE: You may fire the SMAW at a target as close as 10 meters if you are in a defilade position.

Operator Maintenance

Spotting Rifle. The diagram below shows the component parts of the spotting rifle.

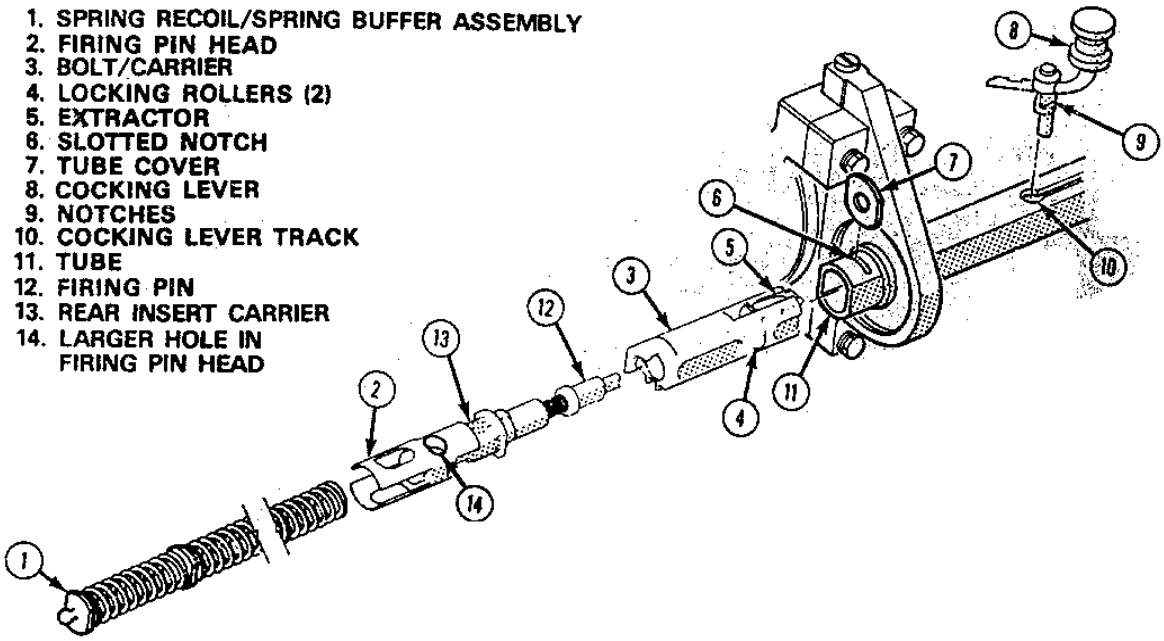

Spotting Rifle

The table below lists the steps to field strip the spotting rifle.

Step	Action
1	Using a cleaning rod, depress the end of the spring assembly (1 in the diagram below). Pushing in and up, start the tube cover (7 in the diagram below) out of slotted notch (6 in the diagram below). Remove the cleaning rod and, while holding your thumb over the rear tube opening, lift the tube cover (7 in the diagram below) the rest of the way out of the slotted notch (6 in the diagram below).) 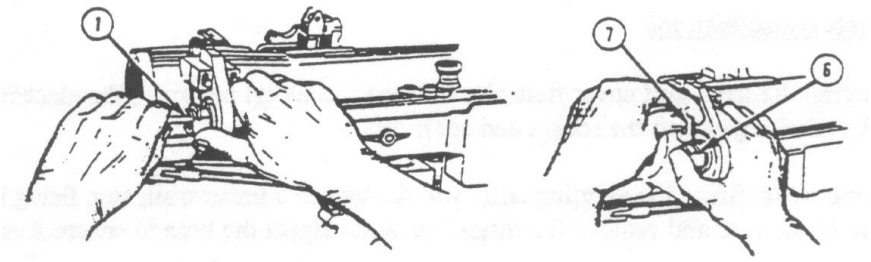 Field Stripping the Spotting Rifle
2	Keeping your thumb partially covering the tube opening, carefully remove the spring assembly (1 in the diagram below). 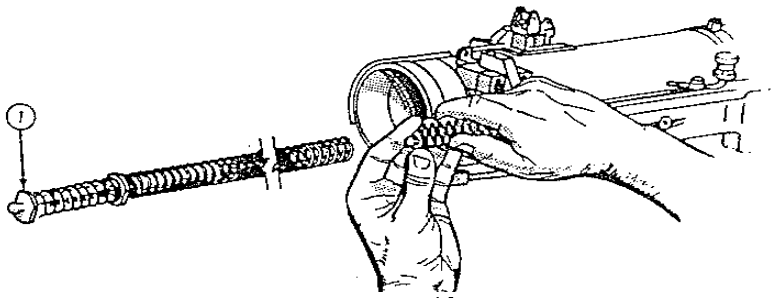 Spring Assembly

Step	Action
3	Pull the cocking lever (8 in the diagram below) to the rear as if cocking the spotting rifle. 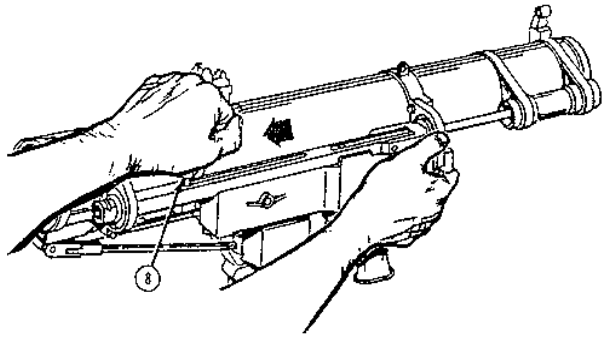 Cocking Lever
4	Lift the cocking lever (8 in the diagram below) out of the tube. Using the tube cover (7 in the diagram below), start at the forward end of the cocking lever track (10 in the diagram below) and slide the bolt (3 in the diagram below) rearward until the firing pin head (2 in the diagram below) just clears the rear tube opening (3 in the diagram below). 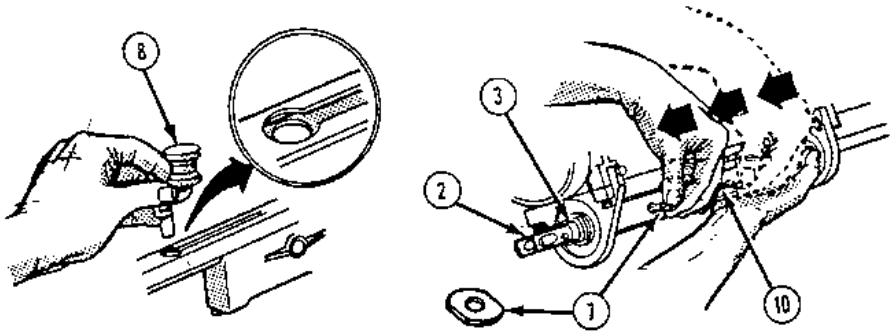 Removing the Bolt
5	Pull the bolt (3in the diagram below) out of the tube (1 in the diagram below). As the bolt is removed, the firing pin head (2 in the diagram below) will snap forward, so do not let it pinch your fingers. Holding the bolt, rotate the rear insert carrier (3 in the diagram below) counterclockwise until the bolt separates into two pieces 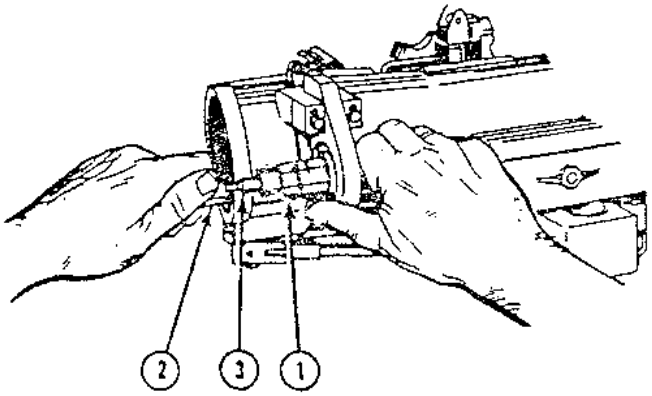 Removing the Bolt

Cleaning the MK153 SMAW

To clean the spotting rifle,

- Clean all internal components and external areas of the spotting rifle with CLP.
- Remove all carbon, corrosion, rust, and dirt using the weapon's bore brush, chamber brush, and cleaning rod. Use a toothbrush, patches, or Q-tips as necessary.
- Do not use abrasive materials.
- Lightly lubricate with CLP.

Use a cloth dampened with CLP to clean the launcher tube and all the attached components. Use a toothbrush, patches, or Q-tips as necessary. Wipe dry with a dry, clean cloth. Clean the inside of the launcher tube (1 in diagram below) by wrapping cleaning cloths dampened with CLP or hot soapy water around the 83mm bore-brush (2 in diagram below) and running it back and forth through the launcher tube.

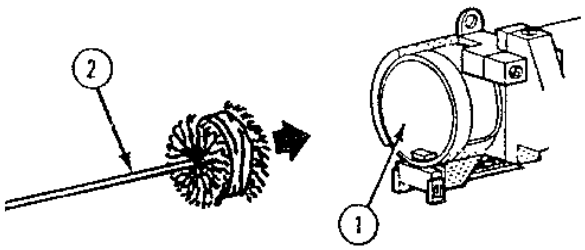

Bore Brush and Launcher Tube

When the tube is clean, repeat the process--using dry, clean cloths to remove all but a light coat of CLP. After every noise simulator is fired from the trainer, the launcher must be cleaned out with water and the bore-brush.

To clean the telescopic sight lenses,

- Remove the rear lens eye-guard by turning the knurled ring counterclockwise (1 in diagram below) until the eye-guard comes off.

- Flip up the front lens cover, and clean both lenses with an optics brush (2 in the diagram below).

- Then use a tissue dampened with ethyl alcohol if required.

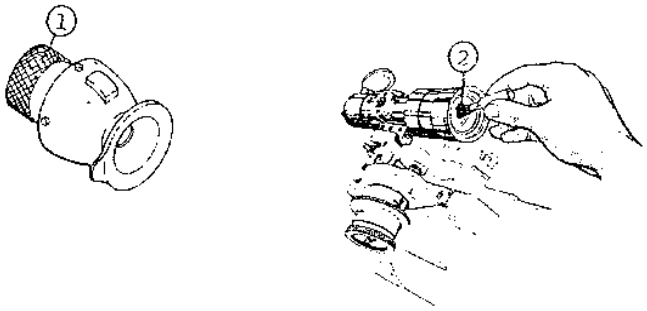

Telescopic Sight Lenses

Before cleaning the trainer, be sure a noise simulator is *not* installed in it. Then, remove the end-cap and clean the inside of the tube with hot, soapy water or CLP. Check the locking tabs and electrical contacts for cracks, chips, and separation from the tube.

Symbol. The symbol used to represent a SMAW in overlays or range cards is shown in the diagram below.

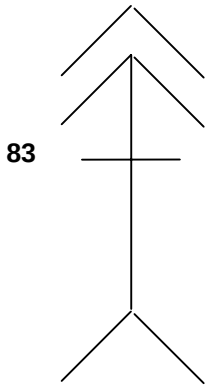

MK153 SMAW Symbol

<u>References</u>.

MCI 0365, *Anti-Armor Operations.*
MCI 0351, *SMAW and LAW Gunner*

Section III. M220E4 TOW Weapon System

History. The basic TOW system was procured for the Marine Corps in 1974. In 1981 an improved TOW missile (ITOW), which has a range of 3,750 meters and improved penetration capabilities over that of the basic TOW missile, was purchased. The ITOW is a missile improvement only; the missile is fired from the basic TOW launcher, which remains unchanged.

Realizing that the basic TOW has distinct limitations during periods of reduced visibility the Army and Marine Corps developed the TOW 2 system. The TOW 2 has a new missile with an improved warhead, a new missile guidance system, and a passive infrared sight, which enables the missile system to engage targets during all types of limited visibility. Any TOW missile must be used with any TOW launcher; however, to attain the full capabilities of the system, the missile should be used with the proper launcher.

Description. The tube launched, optically tracked, wire command link (TOW 1) was developed as a joint Army and Marine Corps heavy antitank/assault weapon. The TOW 1 can be fired from a tripod or an armored HMMWV with a special mount.

The TOW 2 is located in the infantry battalion, tank battalion, LAR and with the AH-1W helicopters. Unlike its predecessor, which was restricted during periods of limited visibility, the TOW 2 weapon system has all weather capability.

Assignment.

Infantry Battalion. The TOW is located in the TOW section, of an anti-armor platoon within a weapons company. The TOW section has a total of four squads with two teams each (i.e., two vehicles with a TOW weapon system mounted on each of the vehicles).

The TOW section has a total of eight TOW variant high mobility multipurpose wheeled vehicles (HMMWVs). Each vehicle carries a total load of seven missiles: one on the weapon system ready to fire and a total of six in the vehicle's missile rack.

In addition to an anti-armor platoon, the TOW can be located in a combined anti-armor team (CAAT) platoon which has a total of eight TOW mounted HMMWVs. The CAAT platoon. is organic to the weapons company in an infantry battalion. The CAAT platoon is broken down into two sections: four TOW vehicles, two M2.50 cal. vehicles, and two MK19 vehicles in each section. The machine gun vehicles are in support of the TOW vehicles; while the gun vehicles fire at the tank, the TOW vehicle will maneuver around to take the shot.

Tank Battalion. TOWs are in an antitank platoon and in the scout platoon of the tank battalion. The antitank platoon has a total of 24 TOW variant HMMWVs; the three TOW sections each have a total of eight TOW variant HMMWVs. In each section are four squads with two TOWs in each section, just like in a weapons company. The two scout sections hold one TOW team of three Marines each.

Light Armor Reconnaissance (LAR). In an LAR battalion is a total of 16 antitank LAVs. In an LAR battalion are four LAR companies. Each LAR company has an antitank section (TOW) with 16 TOW Marines in each section.

Cobra Helicopters. The Cobra helicopter can hold a total of eight TOW missiles. Depending on the mission, the Cobra helicopters can hold four Hell-Fire missiles and four TOW missiles.

Specifications. The table below lists characteristics and capabilities of the TOW.

Weight • TOW weapon system complete	265 pounds
• Missile	65+ pounds
• Ground mounted ready to fire	300 pounds

Range • Minimum	65 meters
• Maximum	3750 meters
Ammunition • Heat	
• Inert	
• TOW 2A	• Round has a 10-inch probe in front of the warhead. • Purpose of the probe is to detonate any reactive armor found on enemy armored vehicles
• TOW 2B	• Round is a fly-over shoot down missile • Once missile flies over the vehicle, the missile will shoot dwon two warheads on top of the vehicle
Penetration	In excess of 26 inches of homogeneous steel
Operates	• In all weather conditions in which the gunner can see the target through the day or night sight tracker • In temperature of –32 degrees to +60 Celsius (-25 degrees to +140 degrees Fahrenheit) • At altitudes up to 3050 meters (10,000 feet). Cold weather (<0 degrees Fahrenheit) range decreases to 3000 meters

Considerations. The following list are facts to consider for employment of the TOW:

- Gunner and weapon are vulnerable to enemy fire during tracking due to the large signature effect. Signature effect is sound, light, and smoke that shows your position on the battlefield.

- Slow rate of fire. The team's experience determines the rate of fire. If a team were to stay in one place and engage multiple targets, the average rate would be two rounds per minute.

- Time of flight. It takes the TOW missile 23 seconds to reach its maximum range of 3750 meters.

- Limited effectiveness in wooded congested avenues of approach. The gunner must have a clear line of sight during engagement. Obstacles in the missile's flight path may prevent proper tracking or cause premature detonation.

- Do not look directly into the sun with the sights.

- Water. If there is a body of water between the gunner and the intended target, the distance of the shot may become a factor, especially if the distance is greater than 2100 meters. Employment in this situation is *not* the preferred method because of the potential for the wire to coming into contact with the water and affecting the electronic guidance process.

- The back blast for the TOW extends 75 meters apart from the rear of the launcher at a 90-degree angle. The first 50 meters are a danger area and the additional 25 meters are a caution area. No friendly troops should be in the back blast area.

- White out. Back blast may prevent the gunner from seeing the target and tracking properly for a few seconds

Nomenclature.

The TOW weapon system (see diagram below) consists of a launcher and encased missile. The launcher consists of a

- Launch tube
- Traversing unit (TU)
- Missile guidance system (MGS)
- Two battery assemblies

- Day sight
- Tripod
- Power conditioner
- Night sight

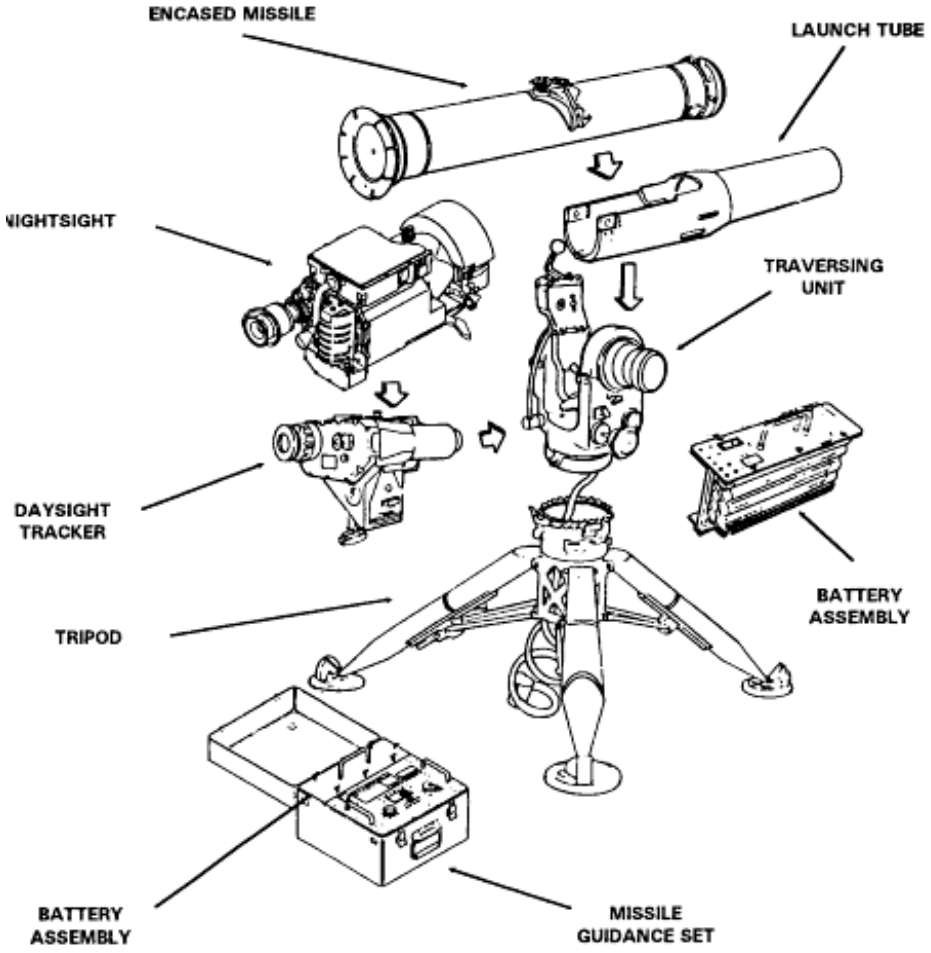

Launch Tube. The launch tube (see diagram below)

- Holds the nose end of the encased missile
- Provides mechanical guidance for the first part of missile flight
- Protects the missile crew from the missile launch motor blast
- Is made of honeycomb material covered with fiberglass
- Weighs 11 pounds

Launch Tube

Encased Missile. The encased missile (see diagram below)

- Is the ammunition for the TOW
- Has forward and rear handling rings for easy handling and missile protection
- Has humidity indicator in the rear to show if the missile has moisture in it
- Is easy to load in the launch tube

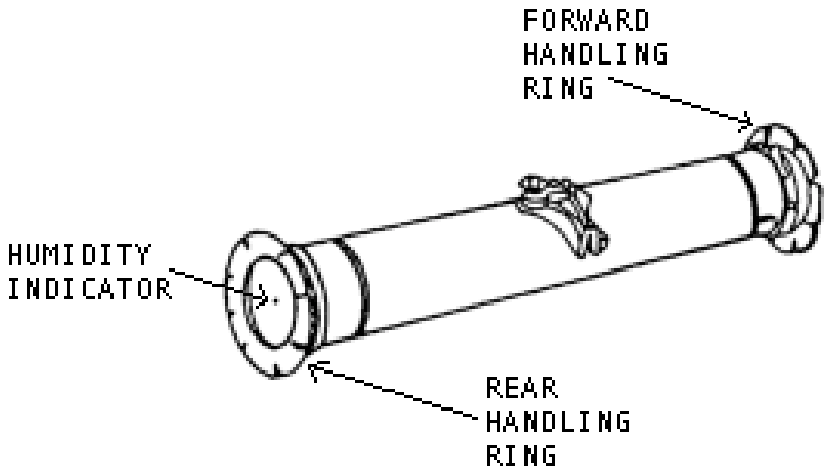

Encased Missile

Traversing Unit (TU). The traversing unit (see diagram below)

- Allows the gunner to track target
  - 360 degrees in azimuth
  - +30 degrees (above horizontal) to –20 degrees (below horizontal) in elevation
- Contains the
  - Trigger used to fire the missiles
  - Arming lever and electrical connector between the launcher and the encased missile
- Houses the
  - Launch tube
  - Day sight
  - Night sight
  - Encased missile
- Has two safety features for the TOW located on the TU:
  - Arming lever
  - Safety cover located on the trigger

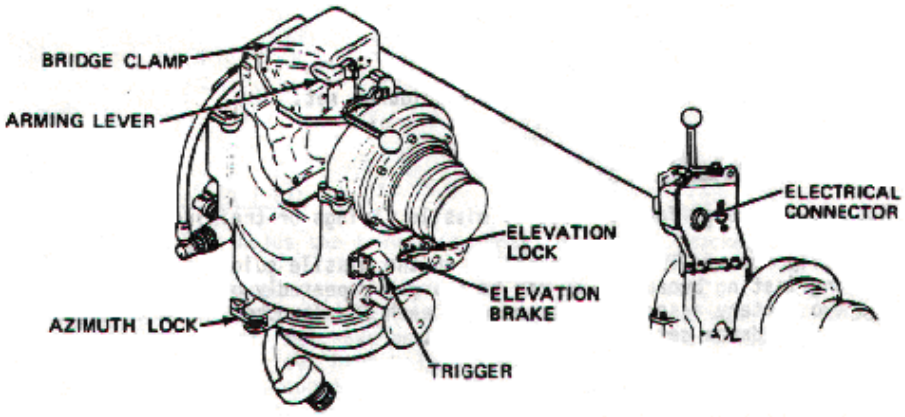

Traversing Unit

Missile Guidance System (MGS). The MGS (see diagram below)

- Is an electronic unit, housed in an aluminum alloy case
- Has two compartments, the
  - Forward compartment houses electronic components
  - Rear compartment houses the battery assembly
- Weighs
  - 58.5 pounds with battery
  - 38 pounds without battery

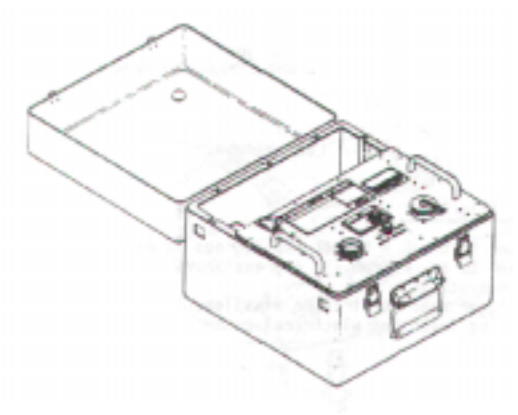

Missile Guidance System

The functions of the MGS are to

- Provide power for the operation of the post amplifier optical sight and itself
- Provide a system test
- Control the missile from launch until impact

Battery Assembly. The battery assembly (see diagram below)

- Is a field replaceable, plug in unit, which supplies three independent current voltages to operate the TOW
- Mounts in the rear compartment of the MGS and is secured by six turn lock wing nuts

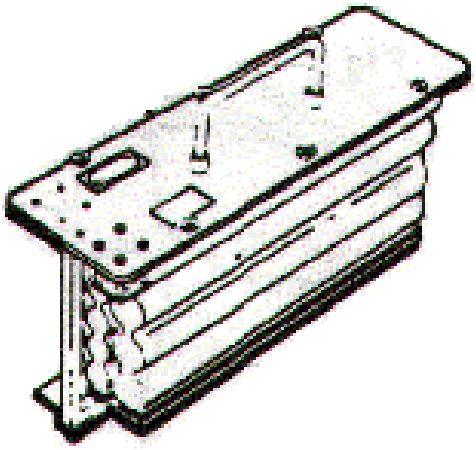

Battery Assembly

Day Sight Tracker. The day sight tracker (see diagram below) enables the operator to track the target. The day sight tracker has

- A 13-power objective lens to enlarge distant targets
- Crosshairs for accurate sighting
- Bore sight adjustment knobs to align the visual system (line of sight) with the infrared system
- A bracket for mounting the thermal night sight

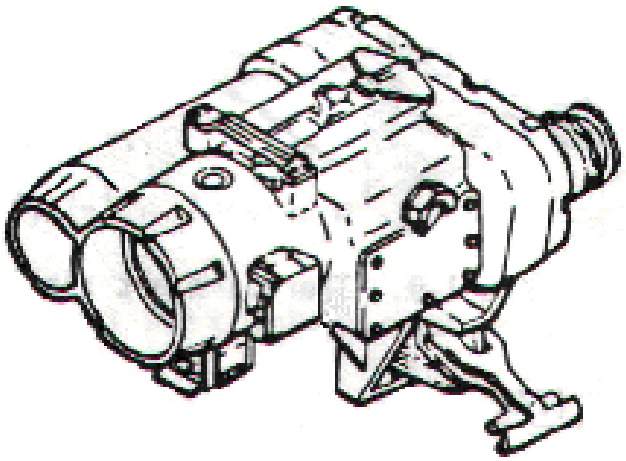

Day Sight Tracker

Tripod. When ground mounted, the tripod (see diagram below) holds the

- Traversing unit
- Day sight tracker
- Launch tube
- Encased missile

The tripod has a quick release coupling clamp for easy installation or removal of the traversing unit.

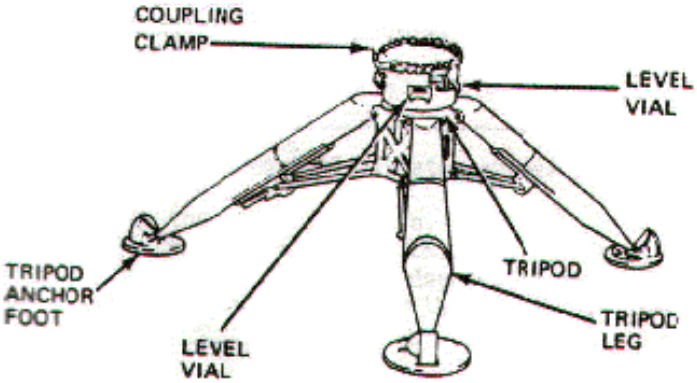

Tripod

Thermal Night Sight. The thermal night sight (see diagram below)

- Enables the gunner to view targets in darkness, heavy fog, and smoke
- Has two fields of view
  - Narrow field-of-view 12 power
  - Wide field-of-view 4 power
- Has adjustment to align the thermal night sight with the day sight tracker

- When assembled, is seated on top of the day sight
- Operates by gathering heat from any object (vehicles, personnel etc.)

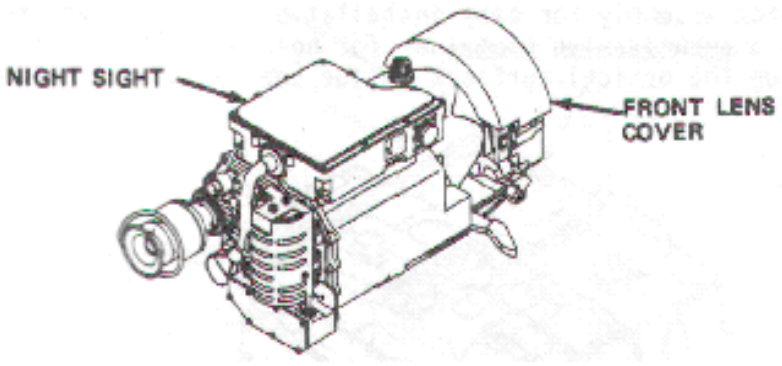

Thermal Night Sight

Power Conditioner. The power conditioner (see diagram below)

- Replaces the battery assembly for the missile guidance system in the vehicle mounted TOW weapon system
- Converts vehicle power to power used in the MGS

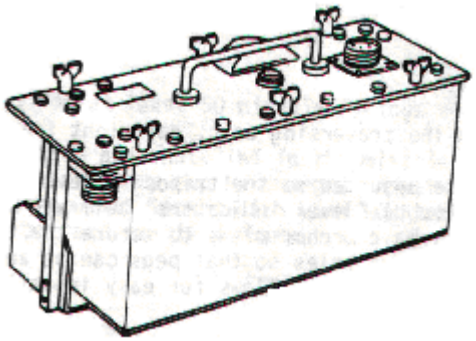

Power Conditioner

Care and Cleaning.

Avoid careless handling of the

- Optical sight
- Night sight
- Traversing unit
- Missile guidance system

Keep the entire weapon clean by conducting a thorough wipe down.

Do *not* use solvents on

- Any fiberglass or plastic parts
- The face of the missile guidance system

No lubrication required or authorized for the TOW.

Clean the lenses of the optical sight only with the proper lens cleaning tissue and solvent or clean water.

Periodically spot paint the weapon.

Be sure that

- When conducting the system self-test, it is done quickly to avoid a drain battery
- Desiccant levels on the system are checked periodically
- The equipment serviceability test is accomplished

Weapons Handling. The TOW missile back blast (see diagram below) extends 75 meters to the rear of the launcher, forming a 90-degree angle danger zone. The danger zone is 50 meters; the caution zone, 25 meters. To avoid injury, be sure no movement is in the back blast area upon firing or the attempt of firing.

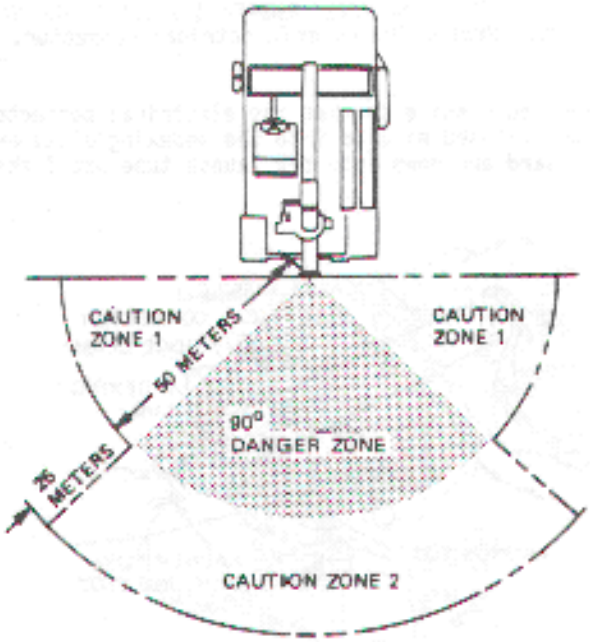

Back Blast Zone

Operation.

Load Missile. To load the missile,

- Remove the forward cap of the missile container and load the container into the launch tube
- Raise the arming lever, which electrically connects the missile to the launch

Unload the Empty Tube. Once the target has been hit, the gunner immediately unlocks the bridge clamp on the TU and opens the bridge clamp. Discard the empty tube and reload again.

NOTE: Once the bridge clamp is open, the wires automatically are cut.

System Test. The missile guidance set has a built in self-test that tests the

- Power supply
- Microprocessors
- Bore sight of the launcher

If a fault is identified, the missile guidance system will tell the gunner what is wrong. Conduct a system test prior to each missile launch.

Acquire Target. The gun uses either the optical sight or night sight and tracks the target in the cross hairs of the sight (see diagram below).

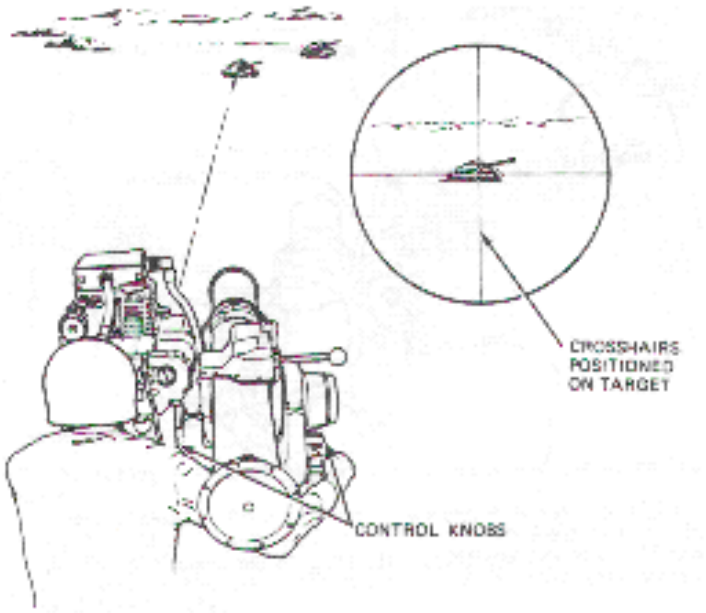

Acquire Target

Fire. When the target has been acquired, press the trigger and hold it down. The trigger is located on the starboard side of the traversing unit beneath a red safety cap. Once the trigger is pressed, seven steps occur in rapid succession:

Step	Action
1	The missile guidance system immediately sends a signal to the missile batteries, triggering the release of compressed nitrogen gas and causing the gyroscope to rotate and come up to speed.
2	About 1.5 seconds after the trigger is pressed, a firing signal is generated which activates the missile launch motor.
3	The launch motor is completely burned inside the missile container forcing the missile from the container.
4	As the missile leaves the end of the container, the missile wings, control surfaces, and warhead probe extend.
5	The infrared source and thermal beacon on the end of the missile begin operating; as the missile proceeds toward the target, two command-link wires are dispersed from the missile for missile command guidance.
6	After the missile has coasted to a point about 12 meters from the launch tube, closing of the delay switch activates the flight motor.
7	The flight motor acceleration and activation of a delay switch cause the safety and arming device to activate and completes the arming sequence.

Guidance to the Target. When the gunner aligns the day sight/tracker on the target and launches the missile, that establishes the line of sight to the target. As the missile flies down range, the IR sensor, which is slaved to the tracker, detects deviation of the missile from the intended line of sight to the target. The sensor receives radiation from coded IR source mounted in the aft end of the missile and produces error signals proportional to the azimuth and elevation displacements of the missile from the intended trajectory. Over a wire-command link dispensed by the missile, correction signals (generated in the guidance system) are sent to the missile, where the missile electronics unit, in turn, processes them. The missile maneuvers in response to these commands by deflecting the control surface actuators. Upon contact with the target, a shaped charge warhead is detonated.

Immediate Action For TOW.

Indication of Malfunction. A malfunction is the failure of ammunition to function correctly when fired or the unexpected functioning of explosive components during a test not intended to cause them to function. Premature

functioning during handling, maintenance, storage, transportation, or deployment constitutes a malfunction. Any abnormal functioning, such as failure of the missile to leave the launch container on launch motor ignition, also constitutes a malfunction.

During operation of the TOW, a malfunction occurs if the missile fails to eject from the launch container after the normal 1.5 second delay after the firing trigger has been pressed or if the missile fails to function properly in flight. Two major types of malfunctions are "misfire" and "hang fire." In flight, malfunctions are classified as two basic types "duds" and "erratic flight." Defective missiles (either fired or encased) must be disposed of by an explosive ordnance disposal team (EOD) only.

Misfire. A misfire (complete failure to fire) occurs if the launch motor fails to ignite after the firing trigger has been pressed. This type of failure may be caused by

- A faulty firing circuit
- A failure of electrical power
- Poor electrical connections
- Short circuits
- Faulty components in the ignition or propellant systems

A misfire in itself is not dangerous, but it cannot readily be distinguished from a hang fire. Any failure to fire should be considered a hang fire until such possibility is eliminated.

CAUTION: After misfire occurs, do not raise the locking handle until the arming lever has been lowered to the safe position. Failure to lower the arming lever will result in the wire cutter squib being activated when the locking handle is raised; therefore, the command link wires will be cut in the encased missile that misfired.

The table below lists the steps to take if a misfire occurs.

<table>
<tr><th>Step</th><th>Action</th></tr>
<tr><td>1</td><td>Continue tracking the target and notify the TOW crew that a misfire has occurred.</td></tr>
<tr><td>2</td><td>Have crew members remain in their firing positions while further attempts are made to correct the malfunction and fire the missile.</td></tr>
<tr><td>3</td><td>Check the
• Missile guidance system connector to insure that it is properly mated and locked
• Bridge clamp locking handle to insure that the bridge clamp is locked in position
• Arming lever to insure that it is raised to connect the weapon system to the encased missile</td></tr>
<tr><td>4</td><td>Try two more times to fire the missile as follows:
<table>
<tr><th>Step</th><th>Action</th></tr>
<tr><td>1</td><td>Lower the arming lever to the safe position.</td></tr>
<tr><td>2</td><td>Then raise the arming lever.</td></tr>
<tr><td>3</td><td>Press the trigger.</td></tr>
</table>
NOTE: After the last firing attempt has been made, lower the arming lever to the safe position. Do not unlock and raise the bridge clamp.</td></tr>
<tr><td>5</td><td>After waiting the 30- minute safety interval after the last firing attempt, remove the encased missile from the launch tube and place it a safe distance away from the TOW emplacement site. As an additional safety precaution, insure that the encased missile is pointing in a direction that will not endanger men or equipment. Notify EOD personnel, so they can dispose of the faulty missile.</td></tr>
</table>

Hang Fire**.** A hang fire is an unexpected delay in the functioning of a series of ammunition components. It may occur anywhere in the series of events, from pressing the firing trigger to launch motor ignition. The amount of delay is unpredictable and may vary from a fraction of a second to several minutes; in most cases, the delay will be from 2.5 seconds to 1 minute in duration. The principle danger of a hang fire is that it may be mistakenly assumed to be a misfire.

If a hang fire delay occurs, continue tracking the target. If the launch motor fails to ignite in 1 minute, follow the procedure described for a misfire (see table above).

Erratic Flight**.** An erratic flight or uncontrolled flight of the missile may occur as a result of any of the following conditions:

- Shortened or broken command-link wire
- Defective missile wing or control surface
- Defective rocket motor
- Excessively high operator tracking errors

Methods of Engagement. The two general methods of anti-armor engagement are

- HAW-MAW-LAW
- Massed surprise fire

HAW-MAW-LAW. HAW-MAW-LAW refers to

- Heavy anti-armor weapons (TOWs and tanks)
- Medium anti-armor weapons (Javelins and Dragons)
- Light anti-armor weapons (AT-4 and SMAWs)

In the HAW-MAW-LAW concept, friendly anti-armor weapons engage enemy targets at their maximum effective ranges. The concept has evolved to include engaging with air, artillery, and naval gunfire at their maximum effective ranges. The idea is to destroy enemy armor as far forward of the friendly positions as possible. This method of engagement is normally employed against large armored formations (see diagram below).

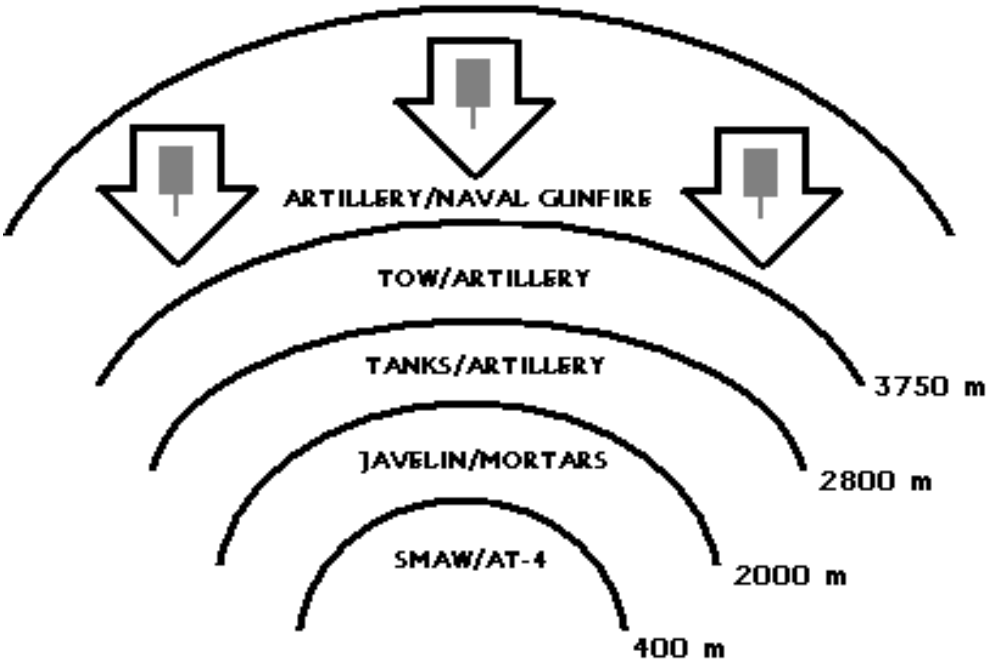

HAW-MAW-LAW

Mass Surprised Fire**.** The mass surprised fire method of engagement visualizes all direct fire weapons engaging the enemy force simultaneously. This method will result in more initial kills on first engagement, but at a much closer range. However, the mass and momentum may still carry the force into friendly positions. This method is ideal in the ambush of individual or small armor units (see diagram below).

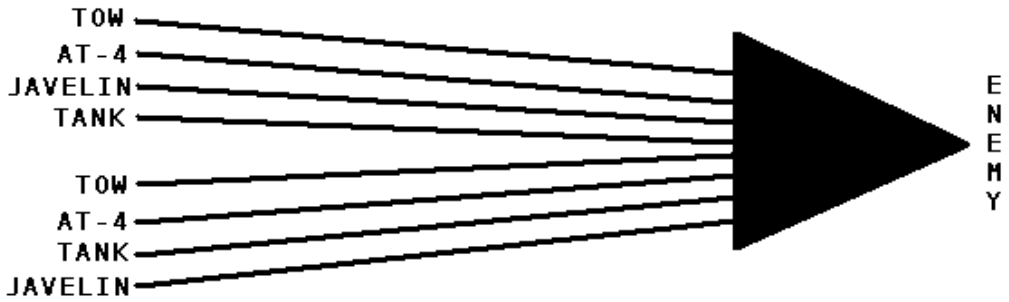

Mass Surprised Fire

Tank Killer Teams. Tank killer teams are commonly referred to as "Hunter Killer Teams" or "CAAT" (Combined Anti-Armor Teams). Tank killer teams

- Are normally squad sized
- Destroy enemy armor without becoming decisively engaged
- Are also used to call for and adjust indirect fires and to report enemy activity
- May use helicopters or vehicles for their mobility

The tank killer team's primary technique of engagement is the ambush technique utilizing massed surprise fires. Tank killer teams usually have, but are not limited to,

- One squad of TOWs,
- Two squads of heavy guns
- One fire team of infantry
- One squad of Dragons or Javelins

Remember, a tank killer team can consist of any of your assets; it is only limited by your imagination.

Reference

IP 2-32, *Anti-Armor Weapons*
TOW MCI 03.55b, *The TOW 2 Weapon System*
FMFM 2-11, *Anti-Armor Operations*
FM 23-34, *TOW Weapon System*

Section IV. Javelin

General. Enemy armor remains a high potential threat on today's battlefield. The Javelin provides the latest technology in engaging enemy armor, using fire and forget capabilities. Primarily due to its enhanced capabilities, the Javelin has recently replaced the Dragon weapon system Marine Corps wide. Currently, all infantry battalions have been fielded and are operating with this new weapon system. The Javelin's predecessor, the Dragon missile, was first introduced in the late 1970s and was the starting point for medium range antitank missiles. As the battlefield changed, the Dragon needed to be replaced, which led to the development of the Javelin in the early 1990s.

Description. The Javelin is a fire and forget weapon system (increases gunner survivability), soft launch (very small backblast), dual mode (top attack or direct fire), man portable, medium antitank weapon. The Javelin missile has an increased capability to engage and defeat tanks and other armored vehicles.

Characteristics. The command launch unit (CLU) consists of the

- Day sight
- Night sight
- Controls
- Indicators

The round is sealed in a launch tube assembly that is composed of the

- Propulsion section
- Guidance and control section
- Warhead and fuse section
- Control surfaces and seeker section

Specifications. The table below lists the characteristics of the command launch unit.

Weight (average weight)	9.77 pounds (4.48 kilograms)
Dimensions • Length	 14.75 inches (37.46 centimeters)
• Width	1650 inches (41.91 cm)
• Height	13 inches (33.02 cm)
CLU sights • Day sight magnification	 4 x
• Field of view	4.8 x 6.4 degrees
Night vision • Wide field of view magnification	 4.2 x
• Field of view	4.58 x 6.1 I degrees
• Narrow field of view magnification	9.2 x
• Field of view	2.00 x 3.00 degrees
CLU Battery Types • Lithium battery BA-5590/U	
• Lithium battery BA-390 Rechargeable (training only)	

The table below lists the characteristics of the Javelin round.

Weight	34.09 pounds (15.46 kg)
Dimensions • Length	 47.60 inches (120.90 cm)
• Diameter with end caps	11.75 inches (29.85 cm)
• Inside diameter	5.5 15 in (14 cm)
• Weight	22.328 pounds (10.126 kg)
Seeker • Magnification	 9 x
• Field of view	1 x 1

The table below lists the characteristics of the battery coolant unit.

Weight	2.91 pounds
Dimensions • Length	 8.160 inches (20.726 cm)
• Width	4.627 inches (11.752 cm)

The table below lists the characteristics of the battery section.

Type	Lithium iron disulfide
Life	4 minutes minimum

The table below lists the characteristics of the gas section (Argon).

Volume	12 cubic centimeters
Pressure	7500 pounds per square inch

The javelin's type of explosive charge is LX14 – 10 pounds.

Capabilities. The table below lists the capabilities for the Javelin.

Range • Maximum	 2000 meters +
• Maximum effective	2000 meters
• Minimum	65 meters

Penetration. Penetration capabilities are classified. The Javelin penetrates all known armor, "well" in an excess of 30 inches of rolled homogeneous steel.

Attack Modes. The missile has two gunner-selectable modes:

- Top
- Direct

Each mode has its own particular flight path or "profile" for reaching the target.

Top Attack Mode. In the top attack mode, the missile comes from above the target to impact and detonate on the top of the target. This capability allows the gunner to attack a vehicle from

- The front
- The rear
- A flank

Generally, armored vehicles have less protective armor on top. By striking the top of the vehicle, the missile penetrates the vehicle and still has enough explosive charge remaining to do extensive damage inside the vehicle. The top attack mode greatly increases the probability of kill.

Top attack is the default mode when the missile seeker is first activated. The exact profile of the missile during flight depends on the range to the target and is determined automatically by the missile on board software.

If the target is under a protective structure, using top attack may cause the missile to impact and detonate on the structure instead of the target. To avoid this, the missile can be programmed for direct attack mode. Minimum engagement for top attack is 150 meters.

Direct Attack Mode. In direct attack mode, the missile impacts and detonates on the side of the target. The direct attack mode flight allows the missile to reach a target under a protective structure at a maximum range of 2000 meters. To do this, the missile flies a more direct route from the gunner to the target vehicle.

The direct attack mode can be selected only after seeker activation when the gunner pushes the attack select (ATTK SEL) switch on the right handgrip. As in the top attack mode, the exact profile of the missile flight path depends on the range to the target. Minimum engagement for direct attack is 65 meters.

Section Breakdown. The Javelin section (see diagram below) is located within the anti-armor platoon of the weapons company. A total of 16 Marines and one section leader comprise the section. The section is further broken down into Javelin teams (8 teams total). Each team will carry a total of three rounds and one CLU.

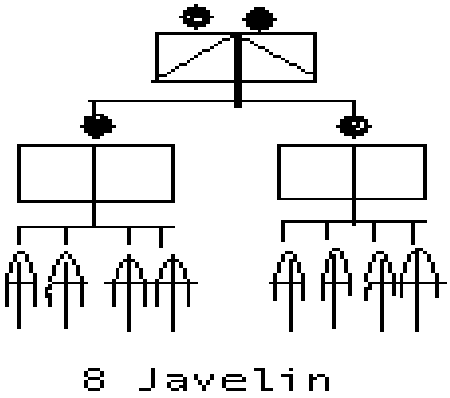

USMC Javelin Organization – Javelin Section

Employment Considerations. Employment considerations are influenced by the

- Mission
- Terrain
- Technical characteristics of the weapon
- Weather
- Command and control arrangements

However, due to the range and lethality of the Javelin, its effect on the battlefield can be much greater than any other close-in anti-armor weapon found in infantry companies today.

Provide Mutual Support. Javelin teams should be positioned so they can support each other as firing pairs. In terrain that has multiple narrow avenues of approach, the commander may assign them singly. In open terrain, the entire section can be positioned to achieve overlapping sectors.

Mutual support prevents the enemy from isolating a portion of the friendly unit and then concentrating on one sector without being subjected to fire from another. If mutual support is achieved, when one Javelin team is destroyed or forced to displace, the others can continue covering the assigned sector.

As a rule of thumb, teams should normally be positioned far enough apart so that enemy fires directed at one can only suppress that one and not others. Disperse Javelin teams approximately 300 meters apart to reduce the casualties and equipment damage that could result from an enemy artillery barrage.

Provide Security. Javelin anti-armor teams should be positioned near or with friendly infantry units for protection against possible attack by dismounted enemy infantry. Without infantry security, anti-armor sections have to provide their own security, which significantly decreases their long-term effectiveness. Though the infantry units are not required to collocate with anti-armor squads, they should be able to cover dismounted avenues of approach to the anti-armor positions. The engagement area the Javelin gunner is assigned to observe should be integrated into the overall security plan for the infantry company.

Detailed Nomenclature.

Command Launch Unit. The main components of the CLU are the

- Main housing
- Absorbers
- Handgrips
- Battery compartment
- Day sight

Main Housing. The main housing is the body of the CLU (see diagram below). The main housing contains the system electronics and the various gunner controls, displays, and day sight and night vision sight of the CLU.

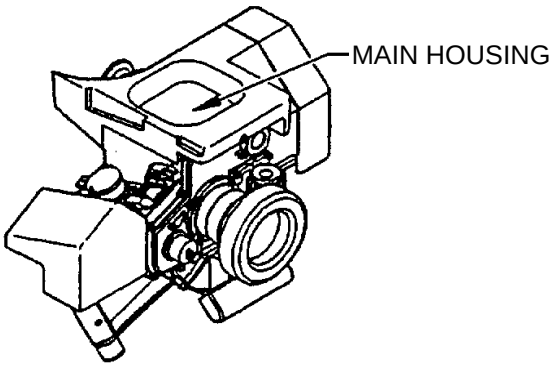

Absorbers. The CLU has absorbers around the main housing to help protect the equipment during field operations. One of the absorbers (see diagram below) is a face shield that protects the gunner's face during firing.

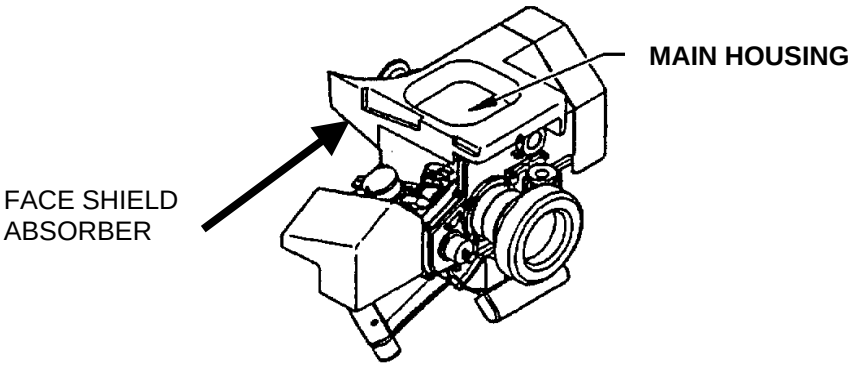

Handgrips. The handgrips are attached to either side of the main housing. The gunner uses the handgrips to hold the CLU. The handgrips are equipped with the gunner controls, which govern all Javelin operations during an engagement.

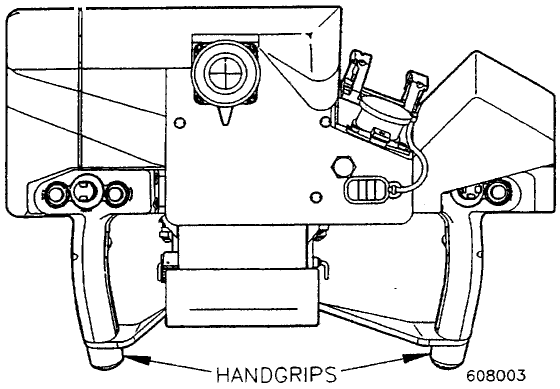

Battery Compartment. Located on the bottom of the main housing is the battery compartment (see diagram below). The battery compartment

- Houses the BA-5590/U CLU battery
- Is equipped with a connector that connects to a corresponding connector on the battery
- Has a detachable cover that is held in place by a wire bail

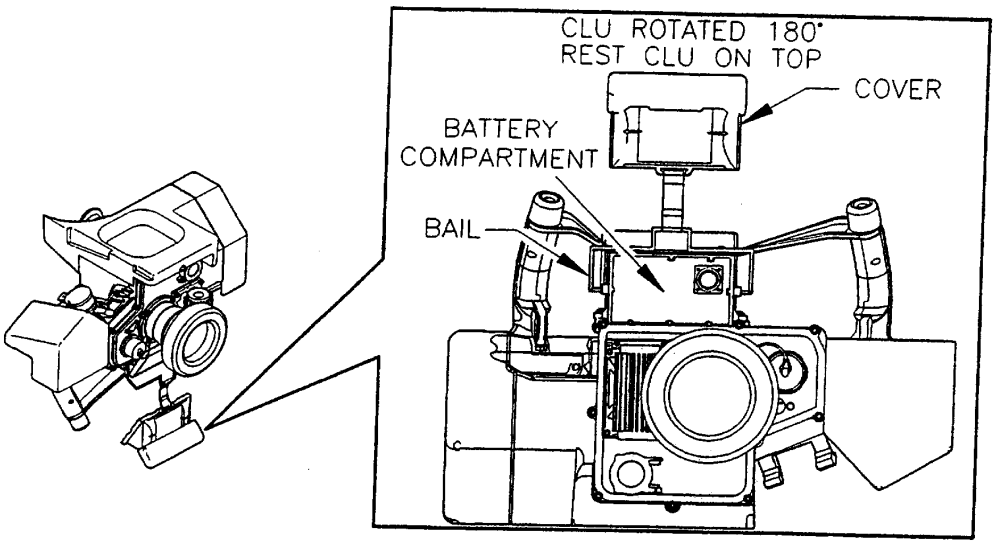

The BA-5590/U battery will last approximately four hours. Rechargeable batteries can be used, but for training only, not for live fire.

Day Sight. The day sight works similar to a telescope--it develops a magnified, visible-light target image. The day sight (see diagram below) consists of the

- Day sight lens
- Status indicators
- Eyecup

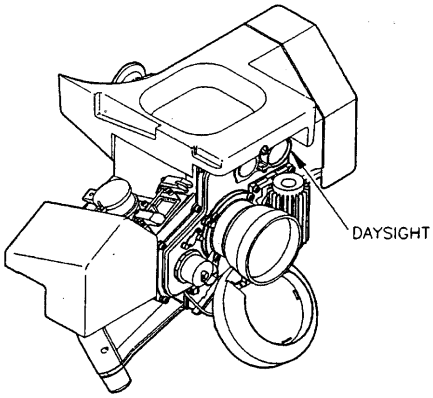

The daylight optical path (see diagram below) starts at the day sight lens and proceeds to the status display. From there, the path goes to the eyecup for the gunner to view. The day sight provides the gunner with (4x) magnification for target viewing and battlefield surveillance.

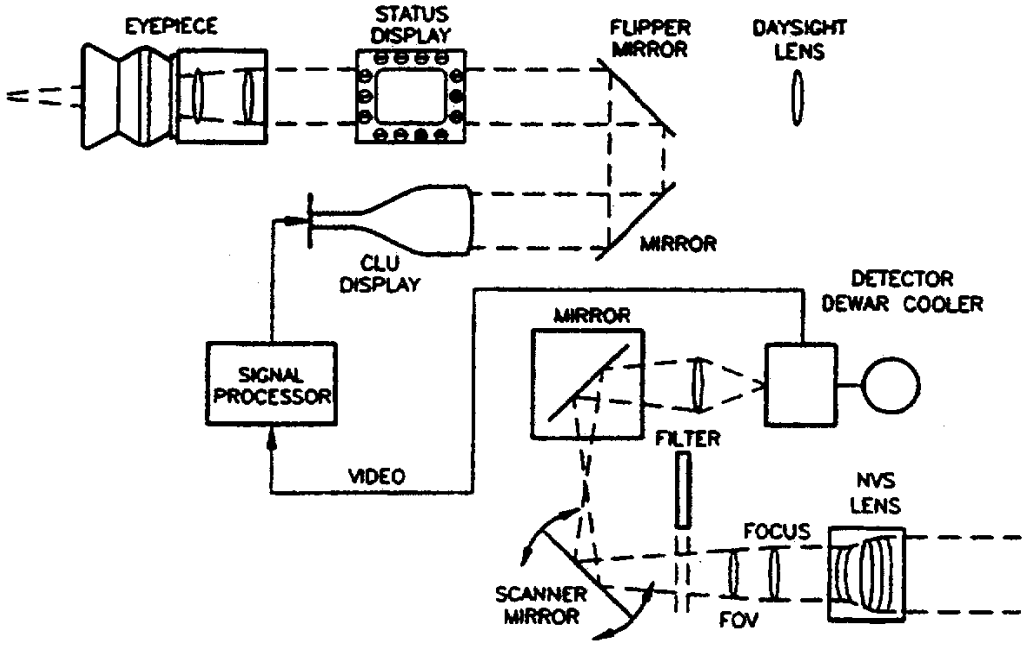

Optical Element (or Optic). Any device through which light passes and may be manipulated is an optical element or optic. Optical elements include

- Lenses
- Mirrors
- Filters
- Windows
- Wave plates

Optical System. An optical system is a collection of two or more optical elements designed for a specific purpose. The day sight, night vision sight, and seeker are examples of an optical system.

Optical Path. An optical path is the line through an optical system along which light travels. An optical path begins with the first optical element (where light enters the system) and ends at the last optical element (where light exits the system).

Night Vision Sight (NVS). The NVS (see diagram below) converts an infrared target image into a visible-light target image for the gunner. The NVS consists of the

- NVS lens
- Detector Dewar cooler
- CLU status display
- Flipper mirror
- Status display
- Eyepiece NVS lens

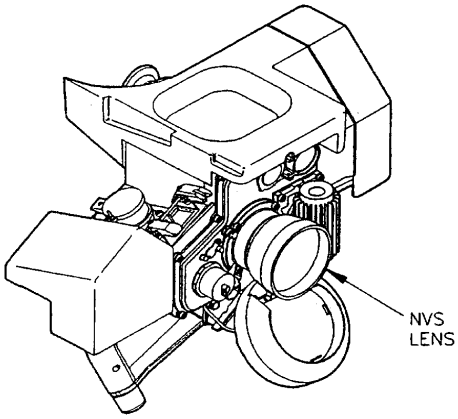

Unlike the day sight lens, the NVS is made up of a set of lenses. The NVS lens allows the gunner to change from wide field of vision (WFOV) to narrow field of vision (NFOV) and back again. The NVS lens also automatically changes the infrared image focus for the detector dewar cooler. Each of these functions is accomplished by moving one of two lenses

- One for FOV
- Other for focus

The NVS is a thermal sight; it does not work on ambient light like your ANPVS 7B. The NVS works on delta T's (difference in temperatures); it is very heat sensitive.

Detector Dewar Cooler (DDC). The DDC (see diagram below) acts like an eye for the NVS and also cools down the NVS. The component gives the CLU its night vision in both WFOV and NFOV. The DDC converts infrared energy into electrical signals. These signals are sent to the CLU display via the signal processor to provide the gunner with a picture of the target area.

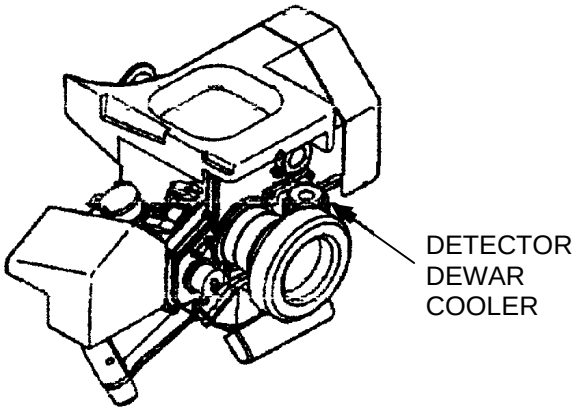

Signal Processor from the DDC. The signal processor is a collection of circuits that takes signals and converts it into video that is used by the CLU display to present a target image from the DDC.

CLU Display. The CLU display (see diagram below) is like a miniature television. It is used to make WFOV, FOV, and seeker infrared images visible to the gunner. The CLU display converts electrical signals from the signal processor into visible images for the gunner. Mirrors inside the CLU reflect the CLU display images so that, to the gunner, they appear to come from the same place as the day sight images.

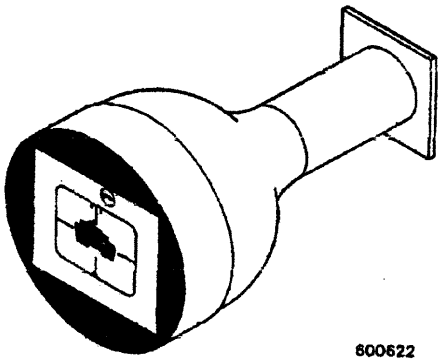

The status indicators are fourteen symbols, or "icons," that surround the CLU display so that the gunner can see them in all FOVs.

Eyepiece. The eyepiece (see diagram below) allows the gunner to adjust the CLU focus to see the day FOV, WFOV, NFOV, seeker FOV, and the status indicators. It includes

- A lens assembly
- An eyecup
- A diopter adjust ring

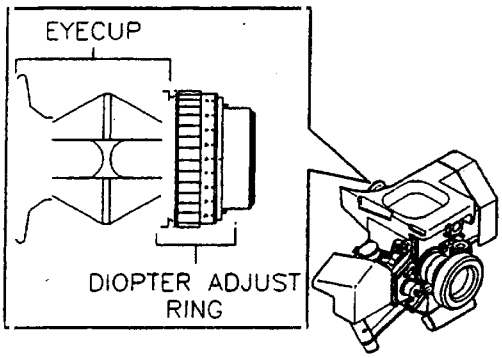

Eyepiece

Flipper Mirror. The flipper mirror allows the gunner to cycle through the day and NVS sites and seek target images:

- "Flipped" one way, the flipper mirror allows the gunner to see the day sight image (see diagram below left)
- "Flipped" the other way, the flipper mirror allows the gunner to see the NYS and seeker images (see diagram below right)

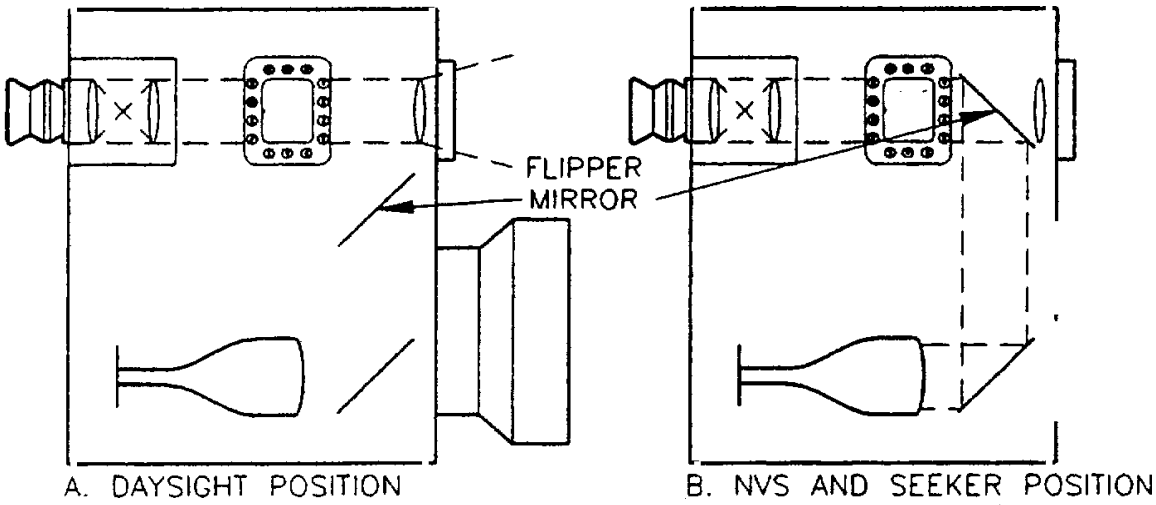

Test Connector. The test connector is used to

- Interface with Javelin training devices
- Perform direct support or higher level maintenance actions
- Upload any new information

CLU Interface Connector. The CLU interface connector (see diagram below) provides electrical interface between the CLU and the round. All signals passed between the CLU and the round--power, digital information, and seeker image signals--pass through this connector.

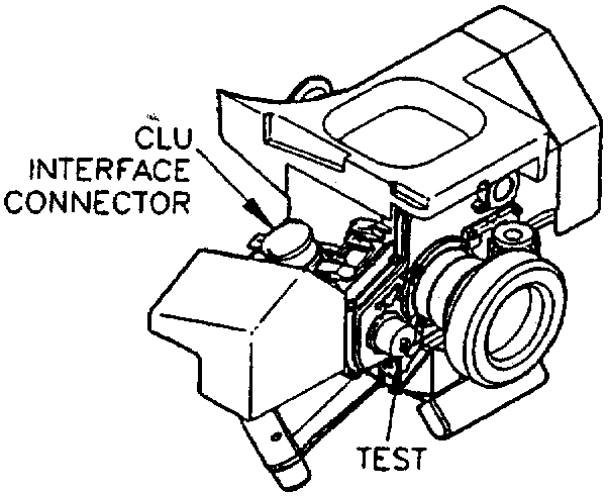

CLU Interface Connector

Humidity Indicator. The humidity indicator (see diagram below) shows the humidity of the air inside the CLU:

- Blue = OK
- White or pink = replace

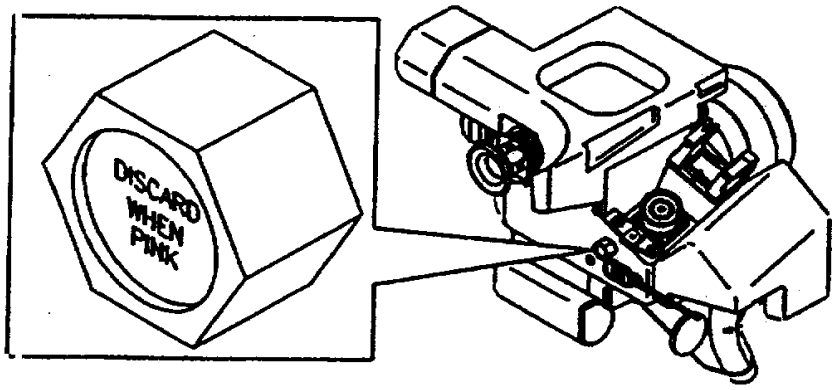

Humidity Indicator

Round. The round is made up of a

- Launch tube assembly (LTA), which houses the missile and provides the interface with the CLU
- Battery coolant unit (BCU)
- Missile, which carries all the components necessary to kill a target

The round can be kept in storage for a long period of time with no need for maintenance; therefore, it is referred to as a "wooden round." Shelf life of the round is 10 years, if not opened out of storage container. The only inspection requirement is for stockpile surveillance.

Launch Tube Assembly (LTA). The LTA (see diagram below) serves as both a handling container and a launch platform for the missile. The LTA consists of

- A launch tube
- Forward and aft end caps
- Carry handle
- Shoulder strap
- Round interface connector
- Shoulder pad

Once the missile is launched, the LTA is discarded.

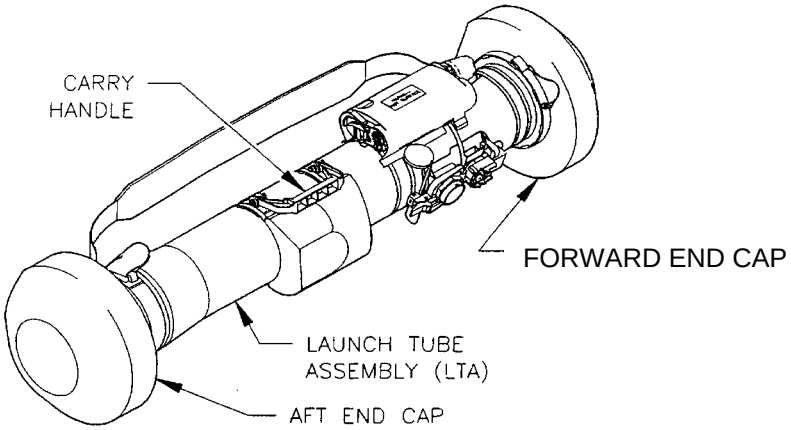

Launch Tube Assembly (LTA)

Launch Tube. The launch tube (see diagram below)

- Houses the missile
- Is a single-piece, composite graphite/epoxy design
- Protects the missile from the environment before the missile is launched

All of the other LTA components mount externally onto this tube.

Battery Coolant Unit (BCU). The BCU (see diagram below) consists of two sections:

- A battery section, which powers the missile electronics before missile launch
- A compressed-gas coolant section, which cools the missile seeker to its operating temperature before missile launch.

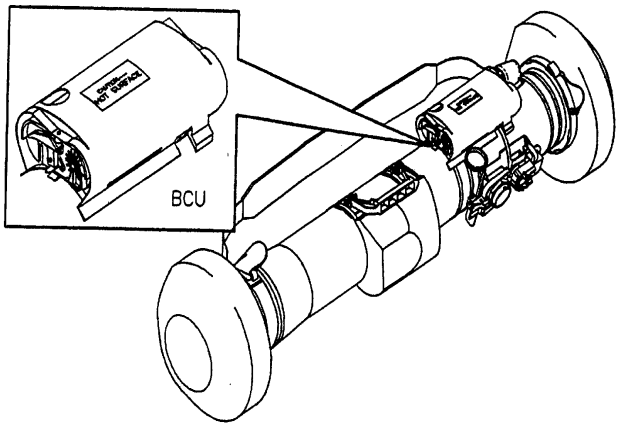

Launch Tube and Battery Coolant Unit

End Caps. The end caps (see launch tube assembly diagram above) are designed to protect the missile from damage during transport and handling. Two end caps are on the LTA:

- Forward end cap, which
    - Protects the missile from moisture, dust, etc.
    - Is not removed unless the missile is to be launched
    - Is removed from the round after the CLU is connected to the round.
    - Is reinstalled to prevent missile damage if the missile is not launched
- Aft end cap, which is
    - Permanently attached to the LTA.
    - Designed so that during launch, the center of the cap is blown out by the blast of the missile launch motor

Each cap has a foam shock absorber to protect the round from impact if it is dropped or otherwise abused. The end caps also provide stability and support when the round is strapped in vehicle transit racks or placed on the ground.

Carry Handle. The carry handle (see launch tube assembly diagram above) is used to lift and carry the round.

Round Interface Connector. The round interface connector (see diagram below) provides the electrical interface between the round and CLU. The round interface connector is the counterpart to the CLU interface connector on the CLU. All signals passed between the CLU and round--digital information, power, and seeker image signals--go through this connector.

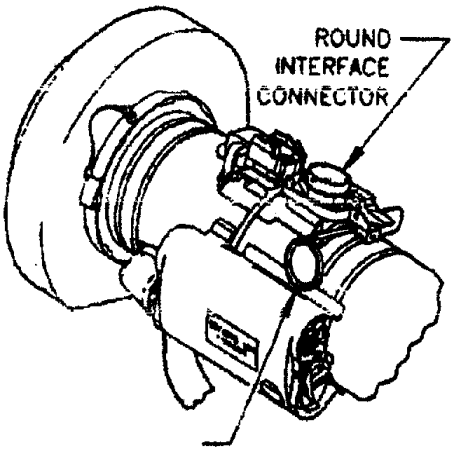

Round Interface Connector

Shoulder Strap. The shoulder strap (see diagram below) provides a means of carrying the round.

Shoulder Pad. The shoulder pad (see diagram below) provides a point of balance and support when the round is placed on the gunner's shoulder.

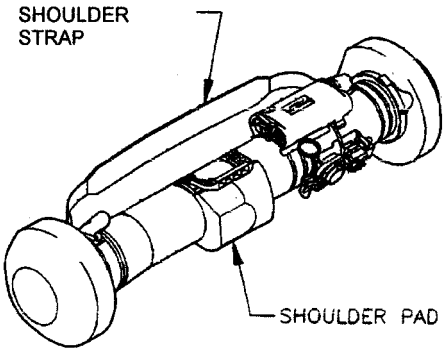

Shoulder Strap and Shoulder Pad

Missile. The Javelin missile provides the means for delivering a high explosive, shaped charge to the target. The missile has two shape charges:

- The first one is to penetrate the reactive armor (about the size of a 60mm mortar round)
- The second is to penetrate the tank itself (about the size of a 5 inch navel gun round)

The Javelin's functions are to

- Acquire a target selected by the gunner
- Track the target during flight
- Direct itself to intercept the target
- Detonate the warhead on contact with the target

The missile (see diagram below) consists of the

- Guidance section
- Two-stage warhead
- Mid body section
- Electronic safe, arm, and fire (ESAF) unit
- Propulsion section
- Control actuator section

The round runs out of fuel at about four seconds after it is launched; the missile glides itself in to the target using the fins on the round.

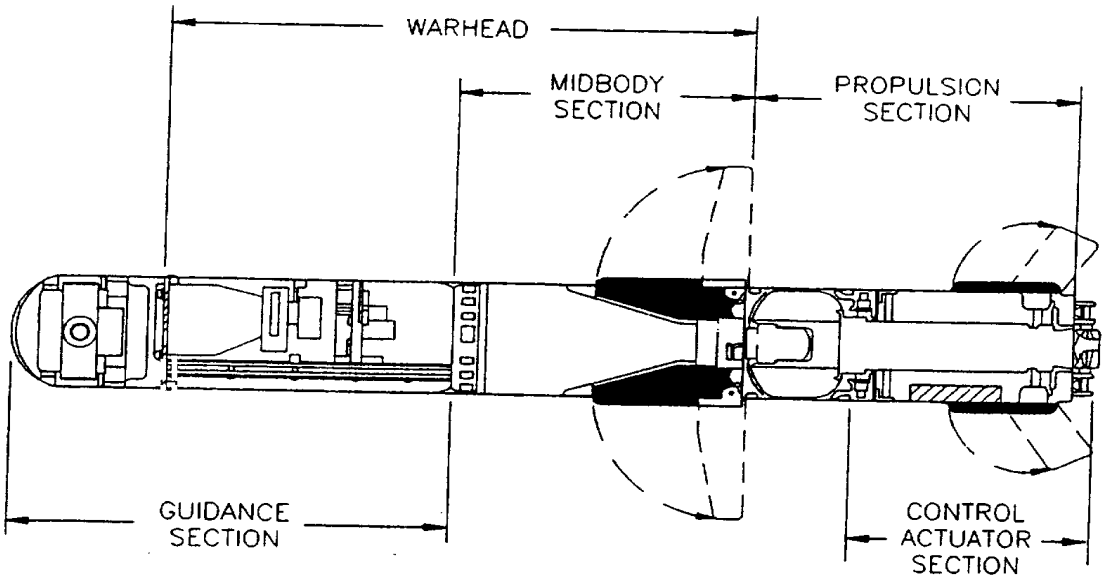

Missile

<u>Weapons Safety</u>.

<u>Backblast Area</u>. The backblast area (see diagram below) is the release of escaping gasses and pressure to the rear, generated by the firing of the missile. In the act of firing or the attempt of firing, the backblast area is to remain clear. The backblast for the Javelin fans at a 60-degree angle with a 25m danger and 35-100m caution areas.

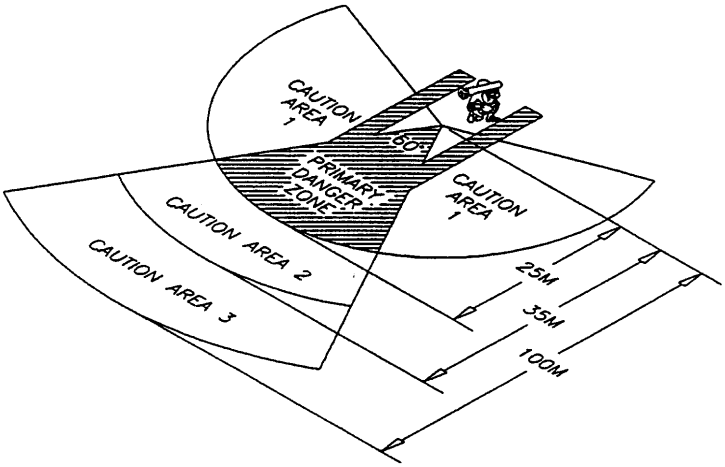

Backblast Area

Operation - Javelin Engagement.

Standard Engagement. The table below lists the steps for standard engagement of the Javelin.

Step	Action
1	Javelin team is in a cold position.
2	The team leader/A-gunner moves to the hot position to conduct a leader's reconnaissance. The gunner prepares the Javelin for firing.
3	The team leader/A-gunner moves back to the cold position. The team then moves to the hot position: the gunner in the tactical carry, A-gunner with a spare missile and BCU.

Once in Hot Position.

Step	Action
1	Leader/A-gunner delivers ADDRAC and removes the forward end cap of the missile.
2	Gunner verifies target ID and begins missile cool down.
3	After cool down is complete, the gunner announces, "Tracking." The A-gunner turns his back to the target, checks the back blast area, and announces, "Back blast area clear. Gun up."
4	After achieving lock on the target, the gunner announces, "Launch." and pulls the fire trigger.
5	Once the missile has launched, the gunner disconnects and discards the expended LTA. The team returns to the cold position and prepares for the next engagement.

Malfunction Drills.

Misfire. When a misfire occurs, the gunner and A-gunner must communicate. The A-Gunner should assist the gunner during a misfire by "talking" him through the procedures (e.g. reminding the gunner to turn off the CLU). The table below lists the steps to follow for a misfire.

Step	Action
1	When a misfire occurs, the gunner announces, "Misfire."
2	Releases the seeker/fire triggers, announces "Attempting Relock."
3	The gunner then attempts to fire again. If the missile still does not fire, the gunner announces, "Misfire." A second time.
4	The gunner then • Turns off the CLU • Takes the weapon off of his shoulder • Disconnects the missile • Checks for debris in the connectors
5	The gunner then reconnects the same missile and attempts to fire. If the missile still does not fire, the gunner announces, "Misfire." for the third time.
6	The gunner then • Turns off the CLU • Removes the misfired missile • Replaces it with a new missile • Engages the target with the new missile
7	The A-gunner then moves the misfired missile 25 meters for the hot position.

Hang Fire. When a hang fire occurs, the gunner and A-gunner must communicate. The A-gunner should assist the gunner during a hang fire by "talking" him through the procedures (e.g. remind the gunner to turn off the CLU). The table below lists the steps to follor for a hang fire.

Step	Action
1	When a hang fire occurs, the gunner announces, "Hang fire." And keeps the weapon on his shoulder and pointed down range for 60 seconds.
2	The A-gunner acts as timekeeper for the 60 seconds and tells the gunner when the 60 seconds has passed.
3	The gunner then • Turns off the CLU • Replaces the missile • Continues the engagement
4	The A-gunner moves the hang fired missile 25 meters from the hot position.

BCU Failure. The table below lists the steps to follow for a BCU failure.

NOTE: The BCU should only be replaced once on a missile, or it may cause a missile to overheat.

Step	Action
1	If the gunner gets a flashing BCU indicator, the gunner announces, "BCU low." The gunner has 30 seconds to complete the engagement.
2	The A-gunner prepares to replace the BCU if the gunner is unable to complete the engagement before he gets a BCU failure indicator.
3	If the gunner gets a steady BCU indicator, the gunner announces, "BCU failure." and keeps the weapon pointed down range.
4	The A-gunner • Disconnects the failed BCU • Connects a replacement BCU • Then tells the gunner, "BCU replaced."
5	The gunner activates the new BCU by pulling the seeker trigger and continues the mission.

Missile Overheat. The table below lists the steps to follow for missile overheat.

Step	Action
1	If the gunner gets a flashing missile not ready indicator, the gunner announces, "Missile overheating." and attempts to launch the missile before the indicator turns steady.
2	If the gunner gets a steady missile not ready indicator, the gunner announces, "Missile overheat."
3	The missile is removed from the CLU and replaced with a new missile.
4	The overheated missile is moved to a secure location and allowed to cool for 2 hours.
5	After 2 hours, the missile, with new BCU, may be re-used.

Missile BIT Failure. The table below lists the steps to follow for BIT failure.

Step	Action
1	If the gunner gets a missile BIT failure indicator, the gunner announces, "Missile BIT failure."
2	The gunner then • Removes the weapon from his shoulder • Turns off the CLU • Replaces the failed missile with a new missile • Continues the mission
3	The A-gunner moves the failed missile 25 meters from the hot position.

CLU IT Failure. The table below lists the steps to follow for a CLU BIT failure

Step	Action
1	If the gunner gets a CLU bit failure indicator during an engagement, the gunner announces "CLU BIT failure." and attempts to continue the engagement.
2	When and if the engagement is finished and the team is in the cold position, the gunner turns off the CLU, turns it back on, and runs BIT.
3	If the CLU still fails BIT, the gunner turns in the CLU for maintenance.
4	If the missile fails to fire, the gunner, with the weapon still on his shoulder, turns the CLU off and back on and attempts to launch.
5	If the missile still does not fire, the gunner • Turns off the CLU • Disconnects the missile • Turns in the CLU for maintenance
6	The unfired missile with new BCU may be re-used or is turned in according to local SOP.

CLU Battery Low. The table below lists the steps to follow for CLU battery low.

Step	Action
1	If the gunner gets a CLU battery low indicator during an engagement, the gunner announces, "CLU battery low." and attempts to complete the engagement.
2	At the completion of the engagement and when the team is back in the cold position, the gunner replaces the CLU battery.
3	If the CLU shuts down during the engagement, the gunner • Takes the weapon from his shoulder • Turns off the CLU • Replaces the battery • Attempts to re-engage the target
4	The A-gunner assists the gunner.

References.

TM 9-1425, *Technical Manual for the Javelin, Army*
TM 09397B, *Technical Manual for the Javelin, Marine Corps*

Section V. Mechanized Weapons in the Marine Corps

Mechanized Assets in the Marine Corps. The Marine Corps has three types of armored vehicles in its inventory:

- Assault Amphibian Vehicles (AAVs)
- M1A1s
- Light armored vehicles (LAVs)

Each vehicle has capabilities and limitations that dictate its employment within the MAGTF.

Assault Amphibian Vehicles. The AAV is the vehicle that separates the Marine Corps from most other military forces in the world. The only truly amphibious vehicle in the U.S. inventory, the AAV can launch from amphibious shipping well offshore, swim to the beach through heavy surf, and then assault inland. Through all these phases, the AAV can support itself from its upgun turret (commander's cupola), which contains a MK-19 grenade launcher and an M-2 .50 caliber machinegun, while at the same time providing light armor protection to 18 combat loaded Marines inside. The three AAV variants are the

- AAVP7 troop carrier (see diagram below)
- AAVC7 command and control variant
- AAVR7 recovery variant (see diagram below)

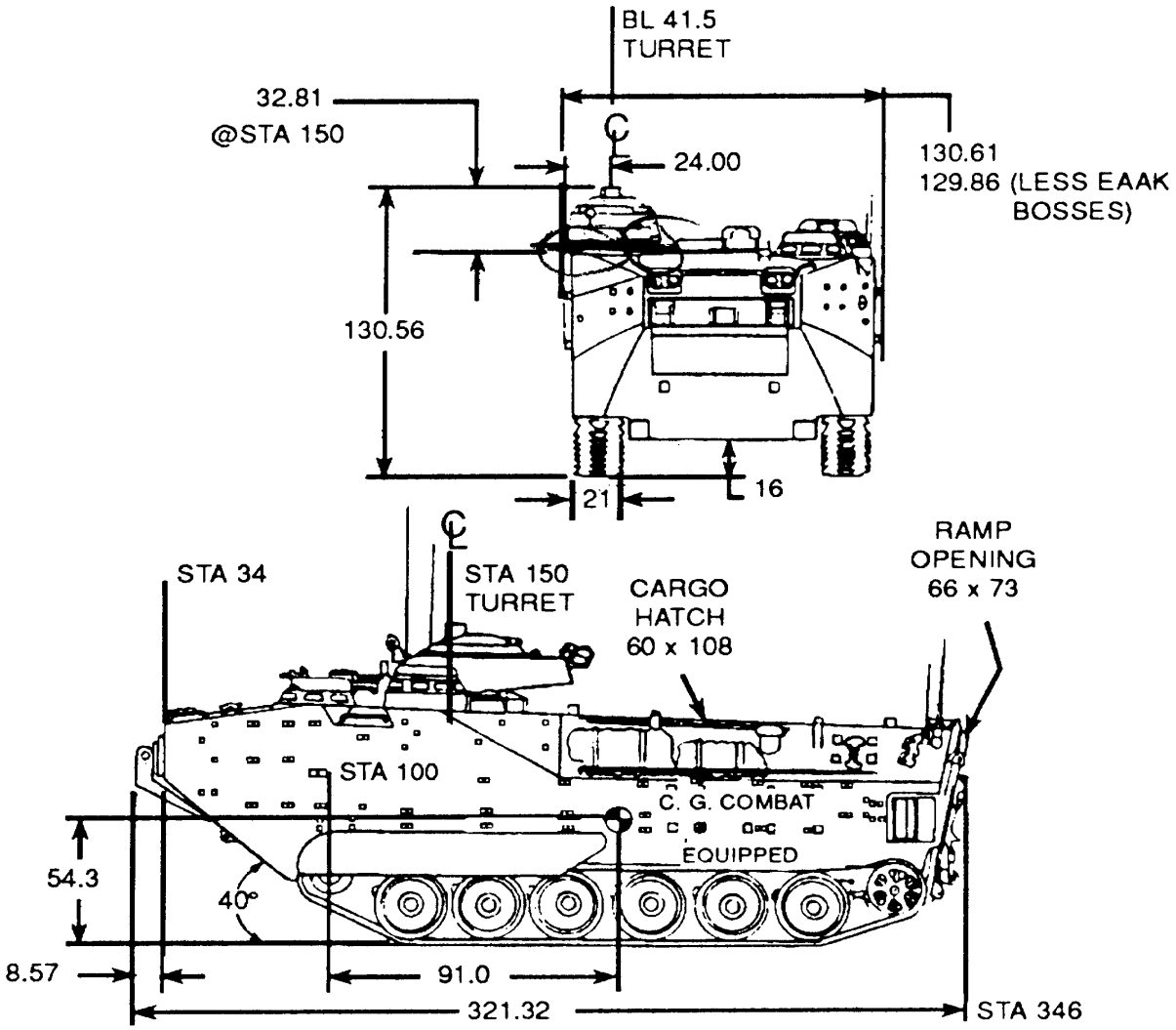

AAVP7

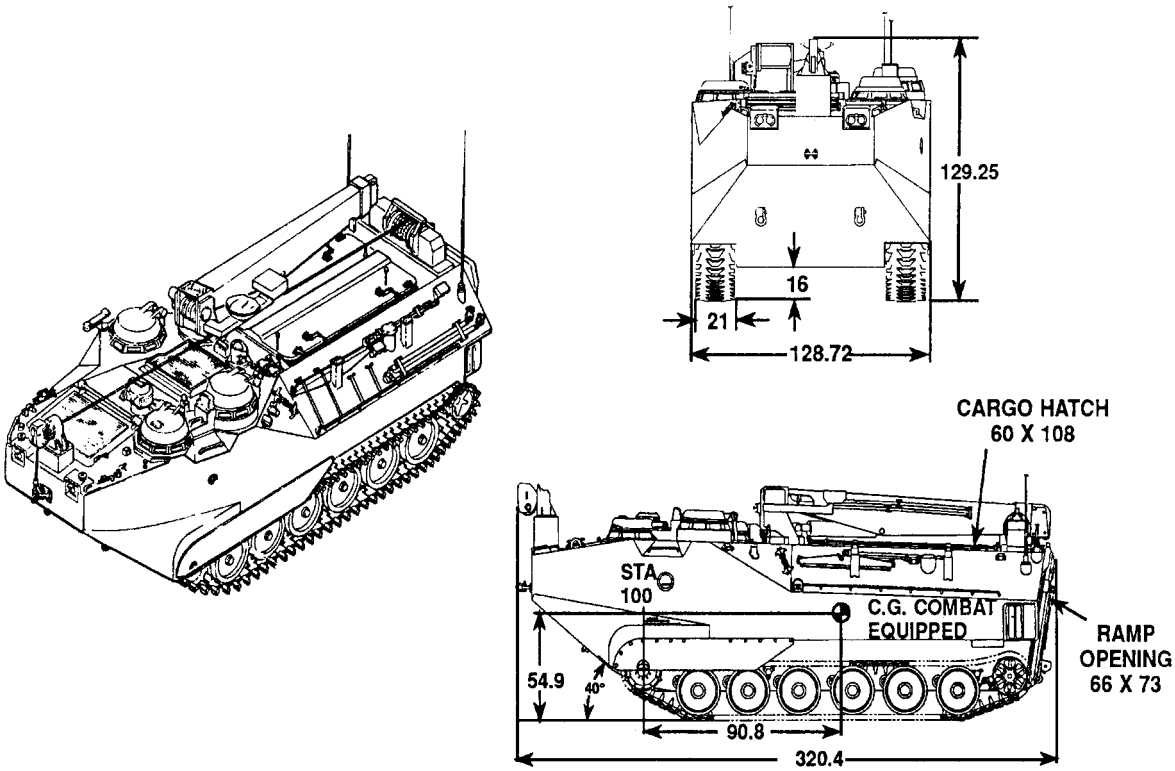

AAVR7

Main Battle Tanks. The Marine Corps' main battle tank, the M1A1, is the most powerful and survivable tank in the world. Equipped with a stabilized 120mm main gun, thermal sights, and a gas turbine engine, it can make first round kills against enemy armor at ranges in excess of 3000 meters while traveling in excess of 30 mph, a capability that is not degraded by darkness or battlefield haze.

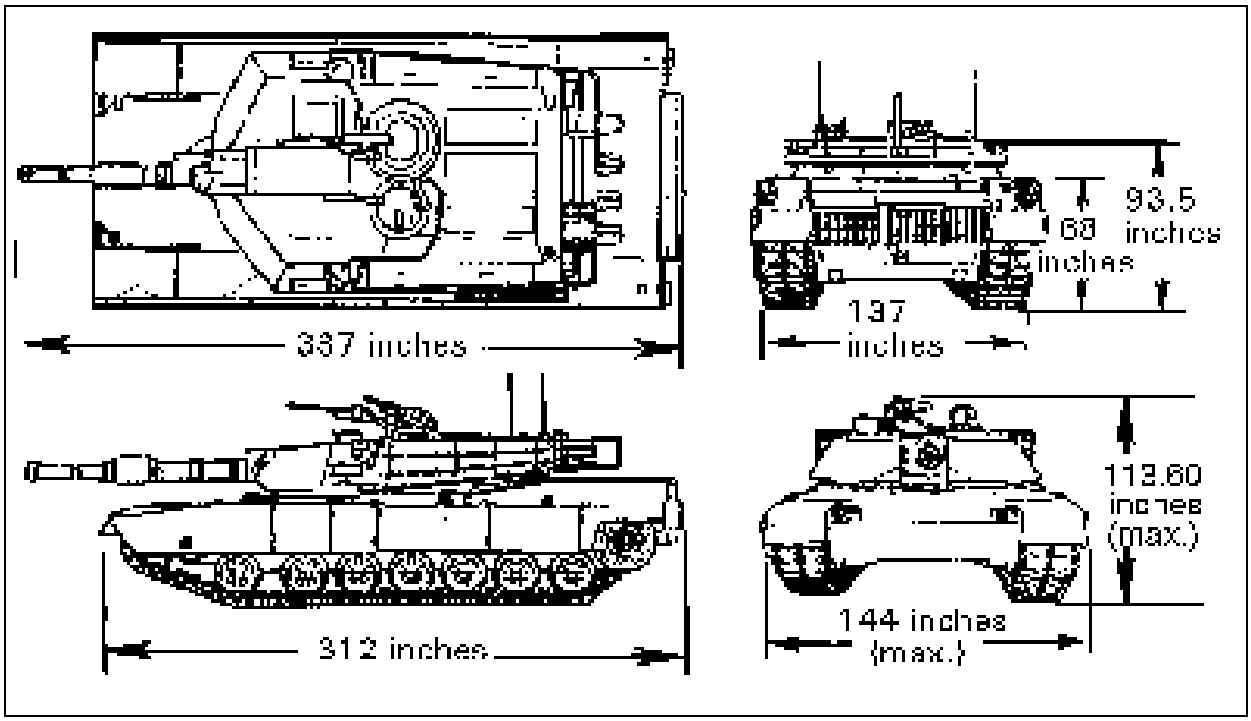

MIAI

Light Armored Vehicles. The LAV is the Marine Corps' armored reconnaissance asset. Organized into light armored reconnaissance (LAR) battalions, LAVs are used to

- Gather information forward of the main battle area.
- Provide the MAGTF commander operational flexibility by giving him standoff distance.

The seven LAV variants are the

- LAV-25, armed with a 25mm chain gun and carrying three crewmen and four scouts (see diagram below)
- LAV-AT, armed with a dual TOW missile launcher
- LAV-M, armed with an 81mm mortar
- LAV-C2, a command and control vehicle
- LAV-R, a recovery variant
- LAV-L, the logistics vehicle
- LAV-AD, the air defense vehicle, carrying two Stinger missile pods and a 25mm gatling gun.

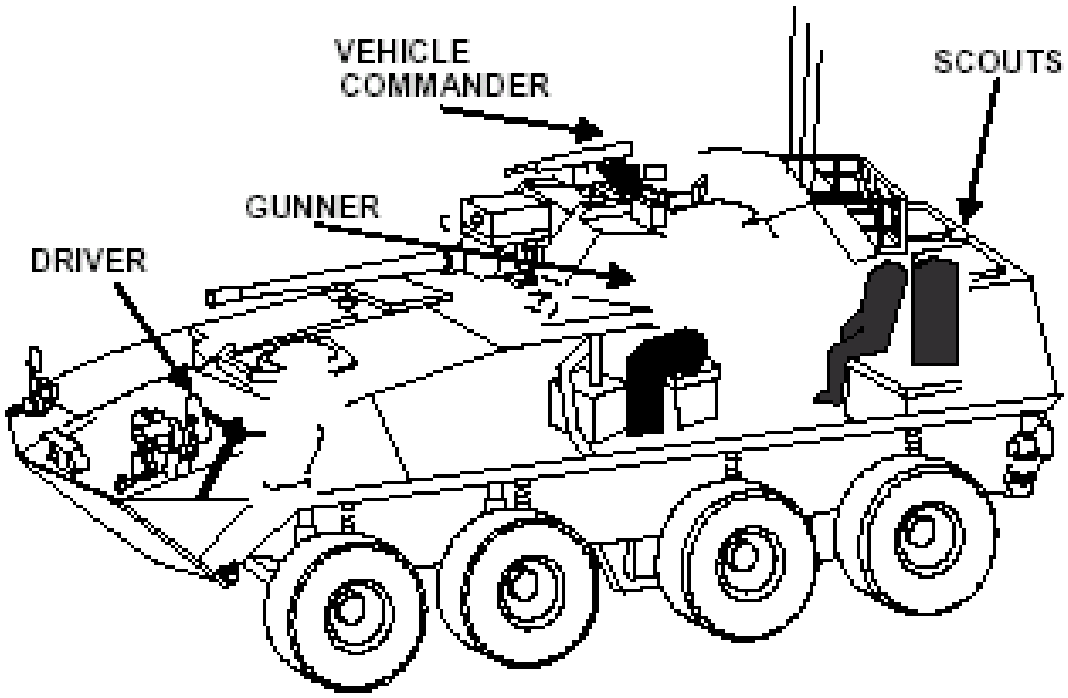

LAV-25

Anti-Armor Weapons Organic to the MAGTF. The table below describes the anti-armor weapons organic to the MAGTF.

Description	Illustration

M1A1 Tank
• Crew: 4
• Weight: 67.59 tons
• Armament:
  • 120mm smoothbore tank gun (MER for HEAT, APFSDS, and MPAT: 4000m)
  • .50 cal M2 MG (MER 1830 m)
  • 2 M-240 7.62 mm MG coax and pintle-mounted (MER 900 m)
• Basic Load: 44 rounds main gun
	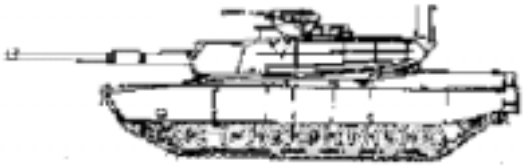
	M1A1 Tank

LAV-AT • Crew: 4 • Weight: 12.6 tons • Armament: TOW ATGM launcher (MER 3,750 m) • Basic Load: 12 TOW missiles (2 ready, 10 stowed) • Top Speed: 60+ mph	 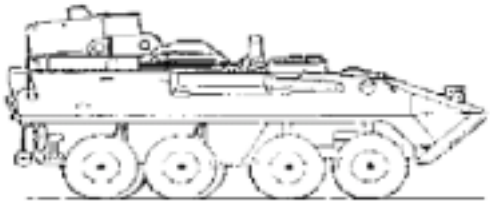 LAV-AT

LAV-25
• Crew: 4
• Weight: 12.2 tons
• Armament:
  • 25 mm M242 chain gun (MER approx. 2,000m)
  • 2-M240 7.62 mm MG coax and pintle-mounted (MER 900 m)
• Basic Load:
  • 260 rounds in AP/HE ready boxes and feeder chutes
  • 1000 rounds stowed
• Top Speed: 60+ mph
	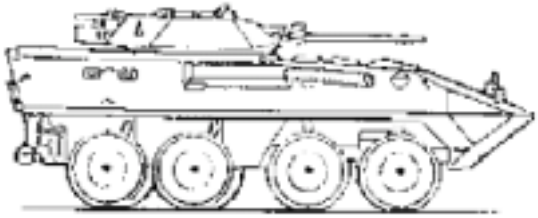
	LAV-25